Flatwork Finisher

Refer to Page 3 for Model Numbers

Parts

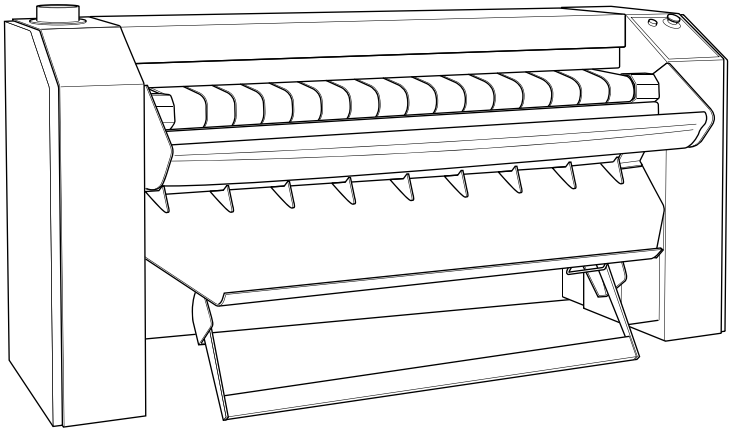

FWF7C_D0152

Alliance Laundry Systems

www.comlaundry.com

Part No. D0152R2
June 2011

Table of Contents

Title	Page
Parts Ordering Information	2
Nameplate Location	2
Model Identification	3
Cabinet - Right Side with Horizontal Exhaust	4
Cabinet - Right Side with Vertical Exhaust	6
Cabinet - Left Side	8
Main Cylinder	10
Driving Rolls	12
Pressure Roll	14
Driving Chains	16
Exhaust Channel	18
Exhaust Channel - Ribbon Guidance System Configuration	20
Finger Protection Panel	22
Pedal	24
Temperature Detection	26
Operating Panel	28
Coin Meter	30
Coupling	32
Motor	34
Draught Valve	36
Fan	38
Gas Heating System	40
Gas Valve	42
Ignition Box	44
Electric Heating System (Drawing 1 of 2)	46
Electric Heating System (Drawing 2 of 2)	48
Steam Heating System	50
Parts Index	53

© Copyright 2011, Alliance Laundry Systems LLC

All rights reserved. No part of the contents of this book may be reproduced or transmitted in any form or by any means without the expressed written consent of the publisher.

Parts Ordering Information

If literature or replacement parts are required, contact the source from whom the machine was purchased or contact Alliance Laundry Systems at (920) 748-3950 for the name and address of the nearest authorized parts distributor.

For technical assistance, call either of the numbers listed below:

(920) 748-3121 Ripon, Wisconsin

+32 56 41 20 54 Wevelgem, Belgium

Nameplate Location

When calling or writing about your product, be sure to mention model and serial numbers.

© Copyright, Alliance Laundry Systems LLC – DO NOT COPY or TRANSMIT

Model Identification

Information in this manual is applicable to these flatwork finisher models:

DI1400/4
DI1800/4
DI2200/4

© Copyright, Alliance Laundry Systems LLC – DO NOT COPY or TRANSMIT

Cabinet - Right Side with Horizontal Exhaust

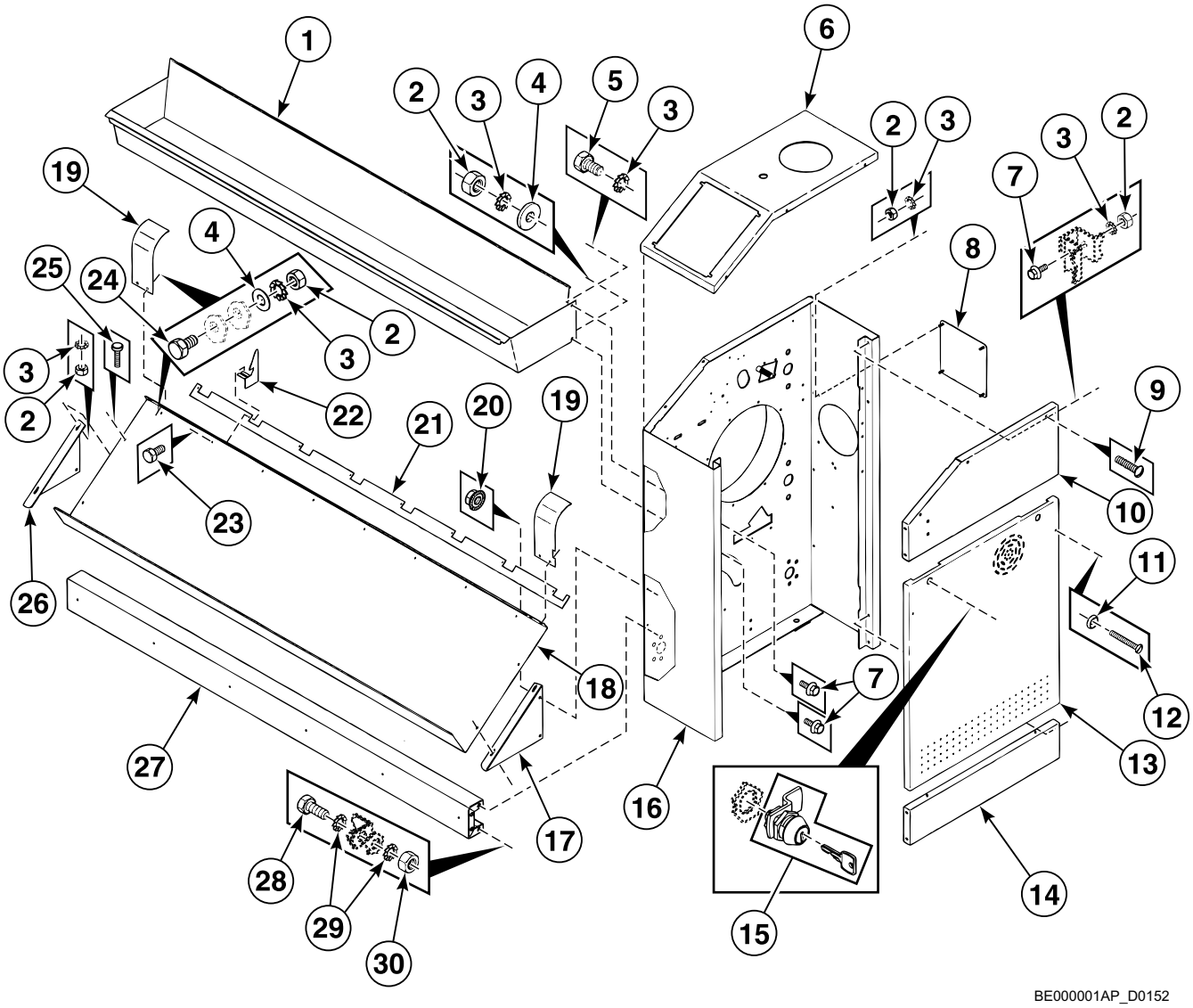

© Copyright, Alliance Laundry Systems LLC – DO NOT COPY or TRANSMIT

Cabinet - Right Side with Horizontal Exhaust

REF	PART NO.	DESCRIPTION	COMMENTS
1	083/03213/00	Feeding Tray	Model DI1400/4
	083/00213/00	Feeding Tray	Model DI1800/4
	083/01213/00	Feeding Tray	Model DI2200/4
2	204/00005/00	Nut	
3	203/00004/00	Washer	
4	202/00101/00	Washer	
5	206/00015/00	Bolt	
6	081/00017/00	Right Top Panel	
	081/00016/00	Right Top Panel	
7	206/00099/00	Bolt	
8	081/00002/01	Exhaust Plate	
9	207/00120/00	Screw	
10	081/00006/00	Connecting Piece	
11	208/00009/00	Washer	
12	207/00119/00	Screw	
13	081/00013/01	Side Door	
14	081/00007/00	Connecting Piece	
15	720/00006/05	Lock	
16	081/00002/00	Right Side Panel	Manual
	081/00003/00	Right Side Panel	Coin
	081/00003/10	Right Side Panel	Coin; NRI
17	083/00216/00	Feed Tray Support	
18	083/03214/00	Return Feed Tray	Model DI1400/4
	083/00214/00	Return Feed Tray	Model DI1800/4
	083/01214/00	Return Feed Tray	Model DI2200/4
19	083/00232/00	Roll Guide	
20	206/00101/00	Nut	
21	083/03218/02	Lathe	Model DI1400/4
	083/00218/02	Lathe	Model DI1800/4
	083/01218/02	Lathe	Model DI2200/4
22	083/00218/00	Separating Plate	
23	205/00113/00	Bolt	
24	205/00107/00	Bolt	
25	207/00116/00	Screw	
26	083/00215/10	Feed Tray Support	
27	081/03004/00	Crossbar	Model DI1400/4
	081/00004/00	Crossbar	Model DI1800/4
	081/01004/00	Crossbar	Model DI2200/4
28	206/00006/00	Bolt	
29	203/00002/00	Washer	
30	204/00003/00	Nut	

© Copyright, Alliance Laundry Systems LLC – DO NOT COPY or TRANSMIT

Cabinet - Right Side with Vertical Exhaust

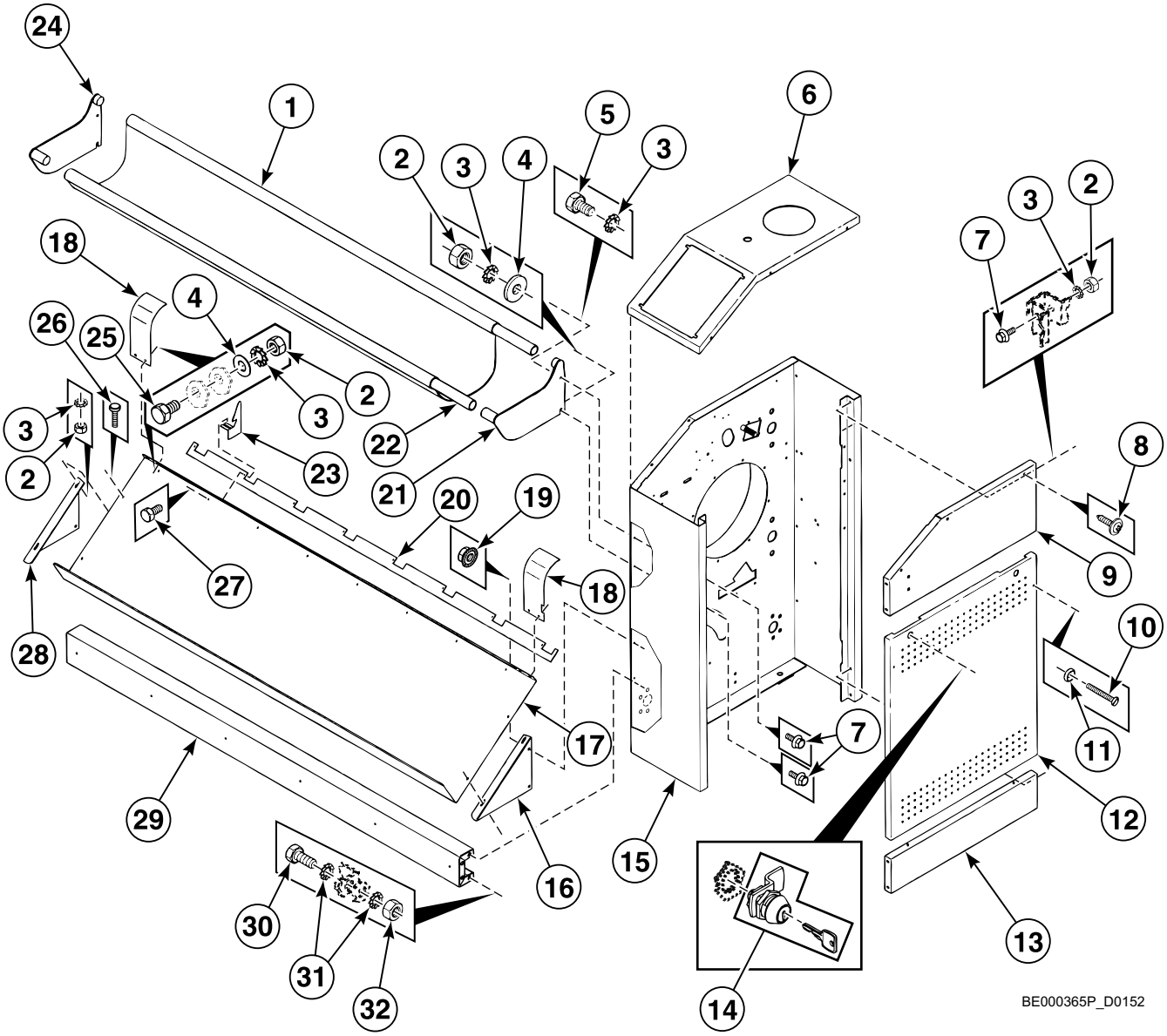

© Copyright, Alliance Laundry Systems LLC – DO NOT COPY or TRANSMIT

Cabinet - Right Side with Vertical Exhaust

REF	PART NO.	DESCRIPTION	COMMENTS
1	083/03264/00	Feeding Tray	
	083/00264/00	Feeding Tray	
2	204/00005/00	Nut	
3	203/00004/00	Washer	
4	202/00101/00	Washer	
5	206/00015/00	Bolt	
6	081/00016/00	Right Top Panel	
7	206/00099/00	Bolt	
8	208/00027/00	Screw	
9	081/00006/00	Connecting Piece	
10	207/00119/00	Screw	
11	208/00009/00	Washer	
12	081/00012/10	Side Panel	
13	081/00007/00	Connecting Piece	
14	720/00006/05	Lock	
15	081/00002/00	Right Side Panel	OPL
	081/00003/00	Right Side Panel	Coin
	081/00003/10	Right Side Panel	Coin; NRI
16	083/00216/00	Feed Tray Support	
17	083/03214/00	Return Feed Tray	Model DI1400/4
	083/00214/00	Return Feed Tray	Model DI1800/4
	083/01214/00	Return Feed Tray	Model DI2200/4
18	083/00232/00	Roll Guide	
19	206/00101/00	Nut	
20	083/03218/02	Lathe	Model DI1400/4
	083/00218/02	Lathe	Model DI1800/4
	083/01218/02	Lathe	Model DI2200/4
21	083/00261/00	Feed Tray Support	
22	083/03263/00	Feed Tray	
	083/00263/00	Feed Tray	
23	083/00218/00	Separating Plate	
24	083/00262/00	Feed Tray Support	
25	205/00107/00	Bolt	
26	207/00116/00	Screw	
27	205/00113/00	Bolt	
28	083/00215/10	Feed Tray Support	
29	081/03004/00	Crossbar	Model DI1400/4
	081/00004/00	Crossbar	Model DI1800/4
	081/01004/00	Crossbar	Model DI2200/4
30	206/00006/00	Bolt	
31	203/00002/00	Washer	
32	204/00003/00	Nut	

© Copyright, Alliance Laundry Systems LLC – DO NOT COPY or TRANSMIT

Cabinet - Left Side

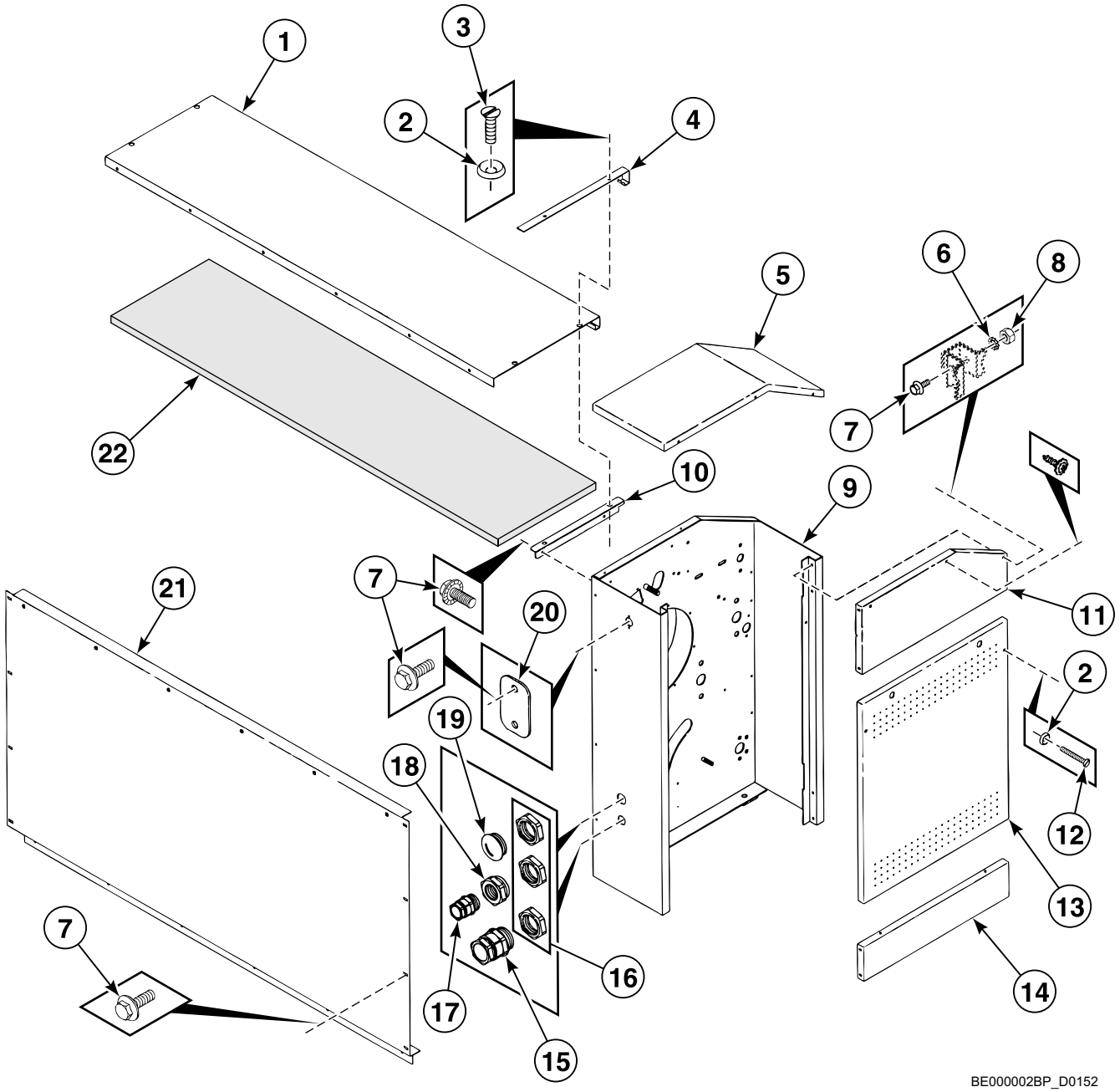

© Copyright, Alliance Laundry Systems LLC – DO NOT COPY or TRANSMIT

Cabinet - Left Side

REF	PART NO.	DESCRIPTION	COMMENTS
1	083/03211/00	Top Panel	Model DI1400/4
	083/00211/00	Top Panel	Model DI1800/4
	083/01211/00	Top Panel	Model DI2200/4
2	208/00009/00	Washer	
3	207/00103/00	Screw	
4	083/00211/01	Lathe	
5	081/00015/00	Top Panel	
6	203/00004/00	Washer	
7	206/00099/00	Bolt	
8	204/00005/00	Nut	
9	081/00001/00	Left Side Piece	
10	083/00007/00	Top Panel Support	
	083/00006/00	Top Panel Support	
11	081/00005/00	Connecting Piece	
12	207/00119/00	Screw	
13	081/00012/10	Side Panel	
14	081/00007/00	Connecting Piece	
15	211/00138/00	Cordlock	
16	211/00139/00	Cap	
17	211/00123/00	Cordlock	
18	720/00096/02	Reducing Ring	
19	211/00124/00	Plug	
20	084/00021/02	Gas Plate	
21	083/03001/00	Back Panel	Model DI1400/4
	083/00001/00	Back Panel	Model DI1800/4
	083/01001/00	Back Panel	Model DI2200/4
22	083/03211/02	Gasket	Model DI1400/4
	083/00211/02	Gasket	Model DI1800/4
	083/01211/02	Gasket	Model DI2200/4

© Copyright, Alliance Laundry Systems LLC – DO NOT COPY or TRANSMIT

Main Cylinder

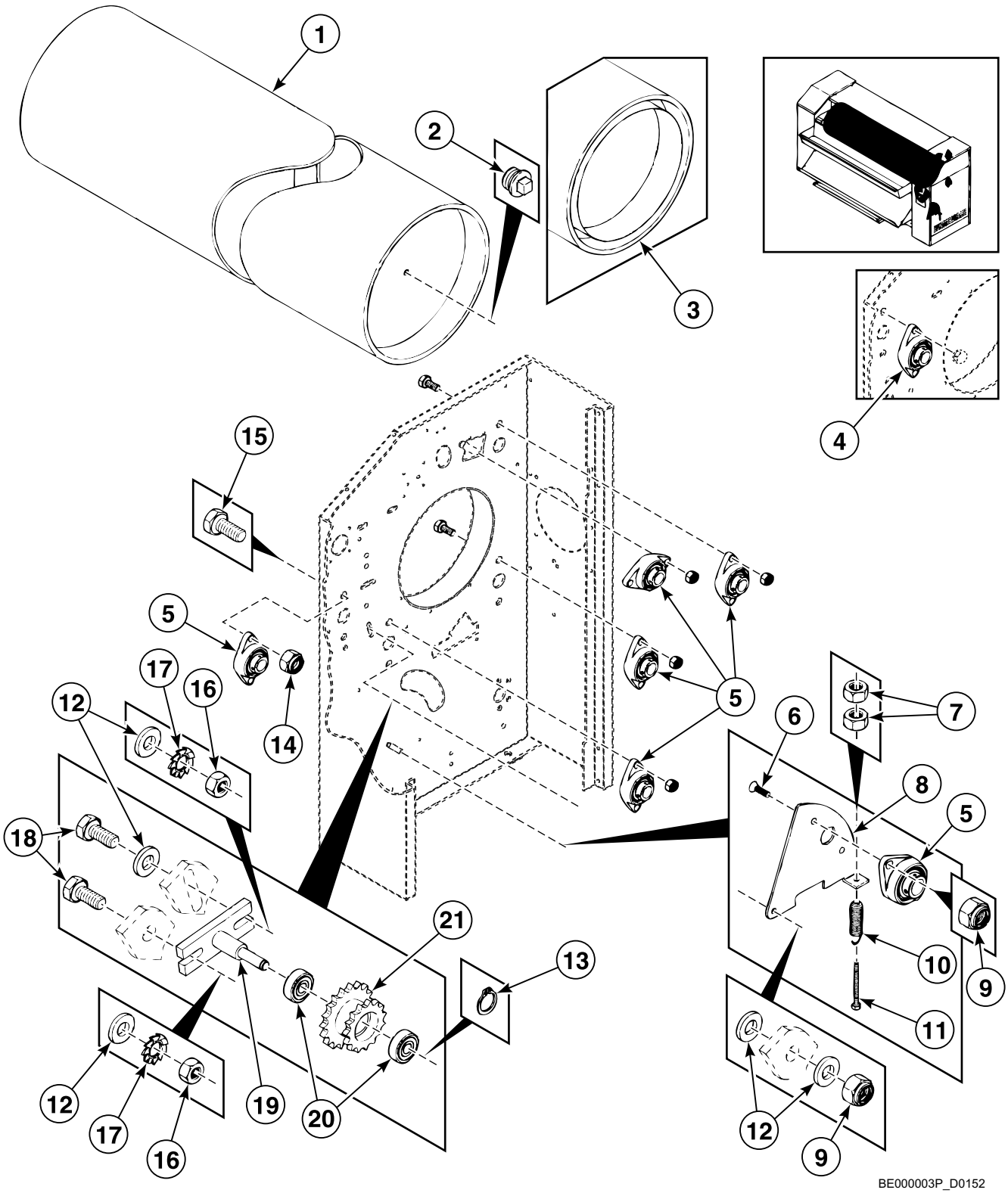

© Copyright, Alliance Laundry Systems LLC – DO NOT COPY or TRANSMIT

Main Cylinder

REF	PART NO.	DESCRIPTION	COMMENTS
1	082/03003/00	Heating Cylinder	Model DI1400/4
	082/00003/00	Heating Cylinder	Model DI1800/4
	082/01003/00	Heating Cylinder	Model DI2200/4
2	710/00026/06	Socket	
3	082/03002/10	Main Roller	Model DI1400/4
	082/00002/10	Main Roller	Model DI1800/4
	082/01002/10	Main Roller	Model DI2200/4
4	084/00002/00	Ball Bearing	
5	084/00026/00	Ball Bearing	
6	206/00118/00	Screw	
7	204/00004/00	Nut	
8	081/00009/00	Belt Adjuster	Right
	081/00008/00	Belt Adjuster	Left
9	204/00110/00	Nut	
10	226/00010/00	Motor Spring	
11	206/00073/00	Bolt	
12	201/00010/00	Washer	
13	212/00033/00	Circlips	
14	204/00113/00	Nut	
15	206/00112/00	Bolt	
16	204/00003/00	Nut	
17	203/00002/00	Washer	
18	206/00119/00	Bolt	
19	080/00002/00	Wheel Support	
20	215/00018/00	Ball Bearing	
21	084/00012/00	Sprocket	

© Copyright, Alliance Laundry Systems LLC – DO NOT COPY or TRANSMIT

Driving Rolls

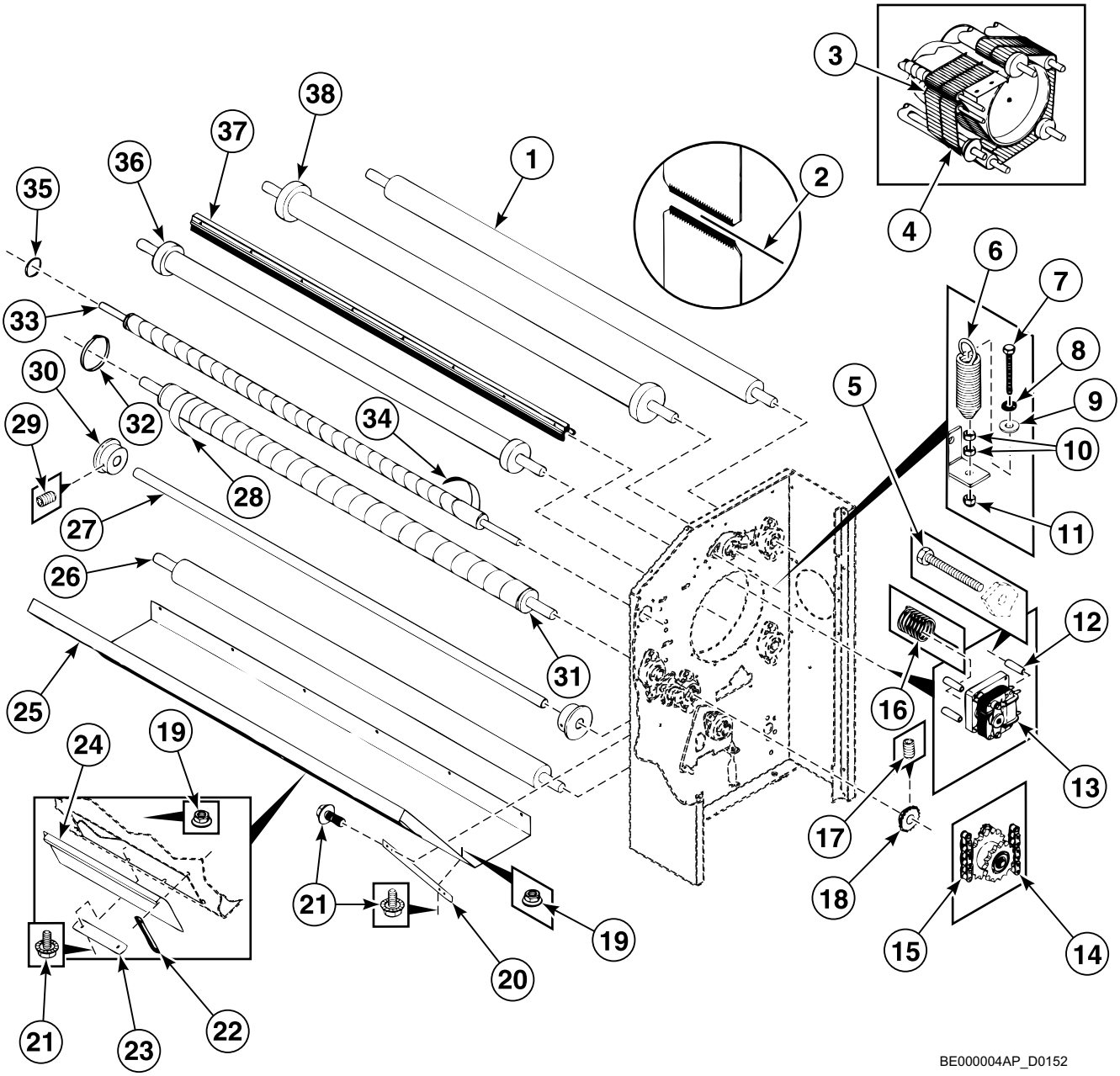

© Copyright, Alliance Laundry Systems LLC – DO NOT COPY or TRANSMIT

Driving Rolls

REF	PART NO.	DESCRIPTION	COMMENTS
1	082/03004/20	Roll	Model DI1400/4
	082/00004/20	Roll	Model DI1800/4
	082/01004/20	Roll	Model DI2200/4
2	082/00007/01	Connecting Pin	
3	082/00008/01	Feeding Belt	
4	082/00007/00	Ironing Belt	
5	206/00103/00	Bolt	
6	226/00010/00	Motor Spring	
7	206/00011/00	Bolt	
8	202/00101/00	Washer	
9	203/00004/00	Washer	
10	204/00005/00	Nut	
11	204/00009/00	Nut	
12	081/00030/00	Pipe	
13	209/00170/06	Drain Valve Motor Assembly	
14	084/00008/00	Chain	
15	084/00007/00	Chain	
16	209/00170/02	Drain Valve Spring	
17	206/00031/00	Screw	
	206/00056/00	Screw	
18	084/00011/00	Sprocket	
19	206/00101/00	Nut	
20	083/00003/00	Support Plate	
21	206/00099/00	Bolt	
22	083/00004/00	Guide Plate	
23	083/00004/01	Stop Plate	
24	083/00005/00	Slide	
25	083/03002/00	Bottom Plate	Model DI1400/4
	083/00002/00	Bottom Plate	Model DI1800/4
	083/01002/00	Bottom Plate	Model DI2200/4
26	082/03004/00	Roll	Model DI1400/4
	082/00004/00	Roll	Model DI1800/4
	082/01004/00	Roll	Model DI2200/4
27	082/03001/00	Axle	Model DI1400/4
	082/00001/00	Axle	Model DI1800/4
	082/01001/00	Axle	Model DI2200/4
28	085/00021/00	Tape	
	271/36942/01	Glue	
29	206/00056/00	Screw	
30	080/00004/00	Cylinder Support	
31	082/03005/02	Driving Roll	Model DI1400/4
	082/00005/02	Driving Roll	Model DI1800/4
	082/01005/02	Driving Roll	Model DI2200/4
32	082/00009/00	Hose Clamp	
33	082/03006/00	Feeding Roll	Model DI1400/4; Coin
	082/00006/00	Feeding Roll	Model DI1800/4; Coin
	082/01006/00	Feeding Roll	Model DI2200/4; Coin
	082/03006/05	Feeding Roll	Model DI1400/4; OPL
	082/00006/05	Feeding Roll	Model DI1800/4; OPL
	082/01006/05	Feeding Roll	Model DI2200/4; OPL
34	085/00021/00	Tape	
35	082/00010/00	Hose Clamp	
36	082/03004/10	Roll	Model DI1400/4
	082/00004/10	Roll	Model DI1800/4
	082/01004/10	Roll	Model DI2200/4
37	084/03025/20	Support Plate	Model DI1400/4
	084/00025/20	Support Plate	Model DI1800/4
	084/01025/20	Support Plate	Model DI2200/4
38	082/03004/30	Roll	Model DI1400/4
	082/00004/20	Roll	Model DI1800/4
	082/01004/30	Roll	Model DI2200/4

© Copyright, Alliance Laundry Systems LLC – DO NOT COPY or TRANSMIT

Pressure Roll

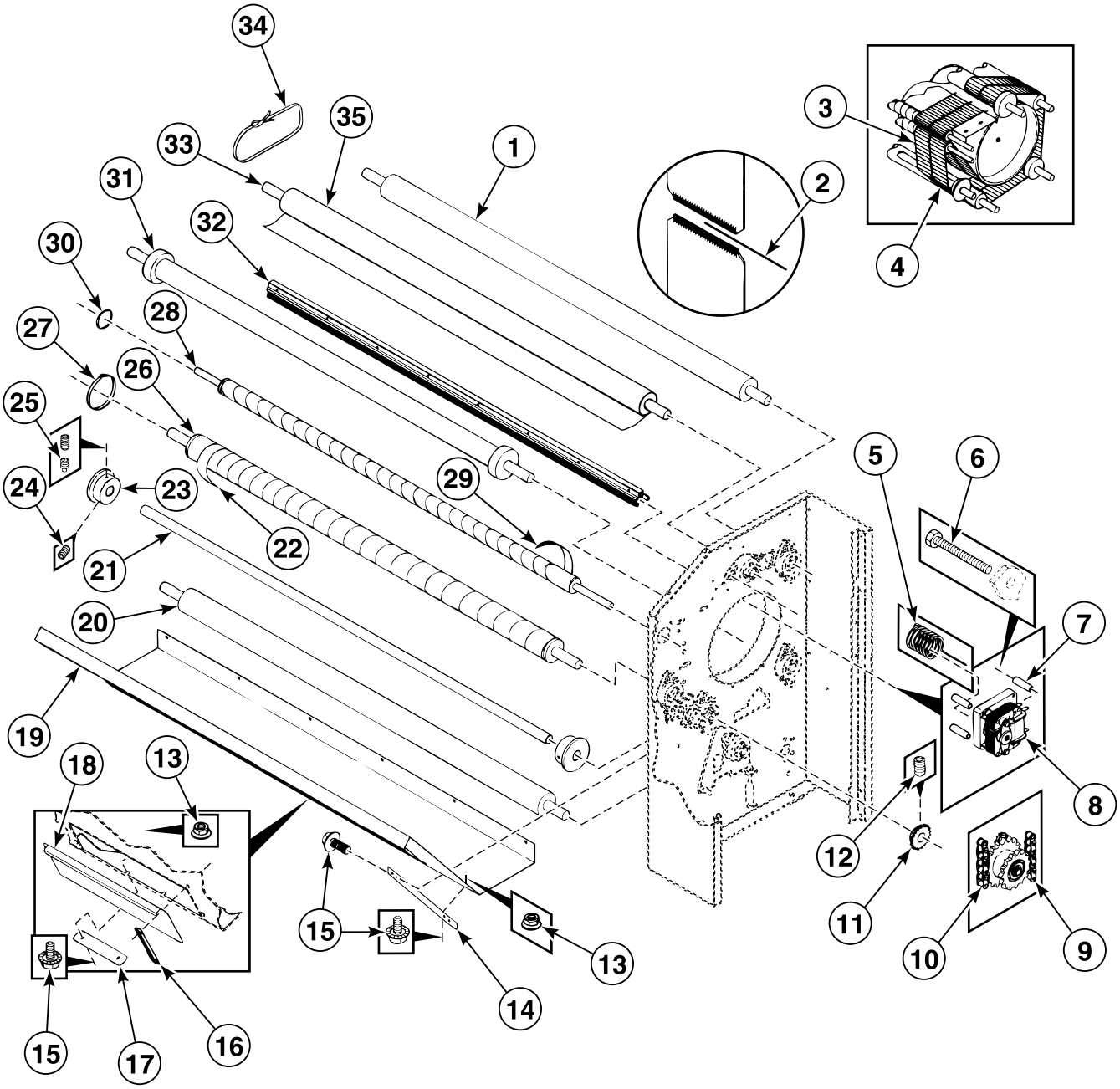

© Copyright, Alliance Laundry Systems LLC – DO NOT COPY or TRANSMIT

Pressure Roll

REF	PART NO.	DESCRIPTION	COMMENTS
1	082/03004/20	Roll	Model DI1400/4
	082/00004/20	Roll	Model DI1800/4
	082/01004/20	Roll	Model DI2200/4
2	082/00007/01	Connecting Pin	
	082/00008/02	Connecting Pin	
3	082/00008/01	Feeding Belt	
4	082/00007/20	Ironing Belt	
5	209/00170/02	Drain Valve Spring	
6	206/00103/00	Bolt	
7	081/00030/00	Pipe	
8	209/00170/06	Drain Valve Motor Assembly	
9	084/00008/00	Chain	
10	084/00007/20	Chain	
11	084/00011/00	Sprocket	
12	206/00031/00	Screw	
	206/00056/00	Screw	
13	206/00101/00	Nut	
14	083/00003/00	Support Plate	
15	206/00099/00	Bolt	
16	083/00004/00	Guide Plate	
17	083/00004/01	Stop Plate	
18	083/00005/00	Slide	
19	083/03002/00	Bottom Plate	Model DI1400/4
	083/00002/00	Bottom Plate	Model DI1800/4
	083/01002/00	Bottom Plate	Model DI2200/4
20	082/03004/00	Roll	Model DI1400/4
	082/00004/00	Roll	Model DI1800/4
	082/01004/00	Roll	Model DI2200/4
21	082/03001/00	Axle	Model DI1400/4
	082/00001/00	Axle	Model DI1800/4
	082/01001/00	Axle	Model DI2200/4
22	085/00021/00	Tape	
	271/36942/01	Glue	
23	080/00004/00	Cylinder Support	
24	206/00056/00	Screw	
25	206/00031/00	Screw	
26	082/03005/02	Driving Roll	Model DI1400/4
	082/00005/02	Driving Roll	Model DI1800/4
	082/01005/02	Driving Roll	Model DI2200/4
27	082/00009/00	Hose Clamp	
28	082/03006/00	Feeding Roll	Model DI1400/4; Coin
	082/00006/00	Feeding Roll	Model DI1800/4; Coin
	082/01006/00	Feeding Roll	Model DI2200/4; Coin
	082/03006/05	Feeding Roll	Model DI1400/4; OPL
	082/00006/05	Feeding Roll	Model DI1800/4; OPL
	082/01006/05	Feeding Roll	Model DI2200/4; OPL
29	085/00021/00	Tape	
30	082/00010/00	Hose Clamp	
31	082/03004/10	Roll	Model DI1400/4
	082/00004/10	Roll	Model DI1800/4
	082/01004/10	Roll	Model DI2200/4
32	084/03025/20	Support Plate	Model DI1400/4
	084/00025/20	Support Plate	Model DI1800/4
	084/01025/20	Support Plate	Model DI2200/4
33	082/03011/00	Pressure Roll	Model DI1400/4
	082/00011/00	Pressure Roll	Model DI1800/4
	082/01011/00	Pressure Roll	Model DI2200/4
34	082/00016/00	Ribbon	
35	082/93001/00	Belt	Model DI1400/4
	082/90001/00	Belt	Model DI1800/4
	082/91001/00	Belt	Model DI2200/4

© Copyright, Alliance Laundry Systems LLC – DO NOT COPY or TRANSMIT

Driving Chains

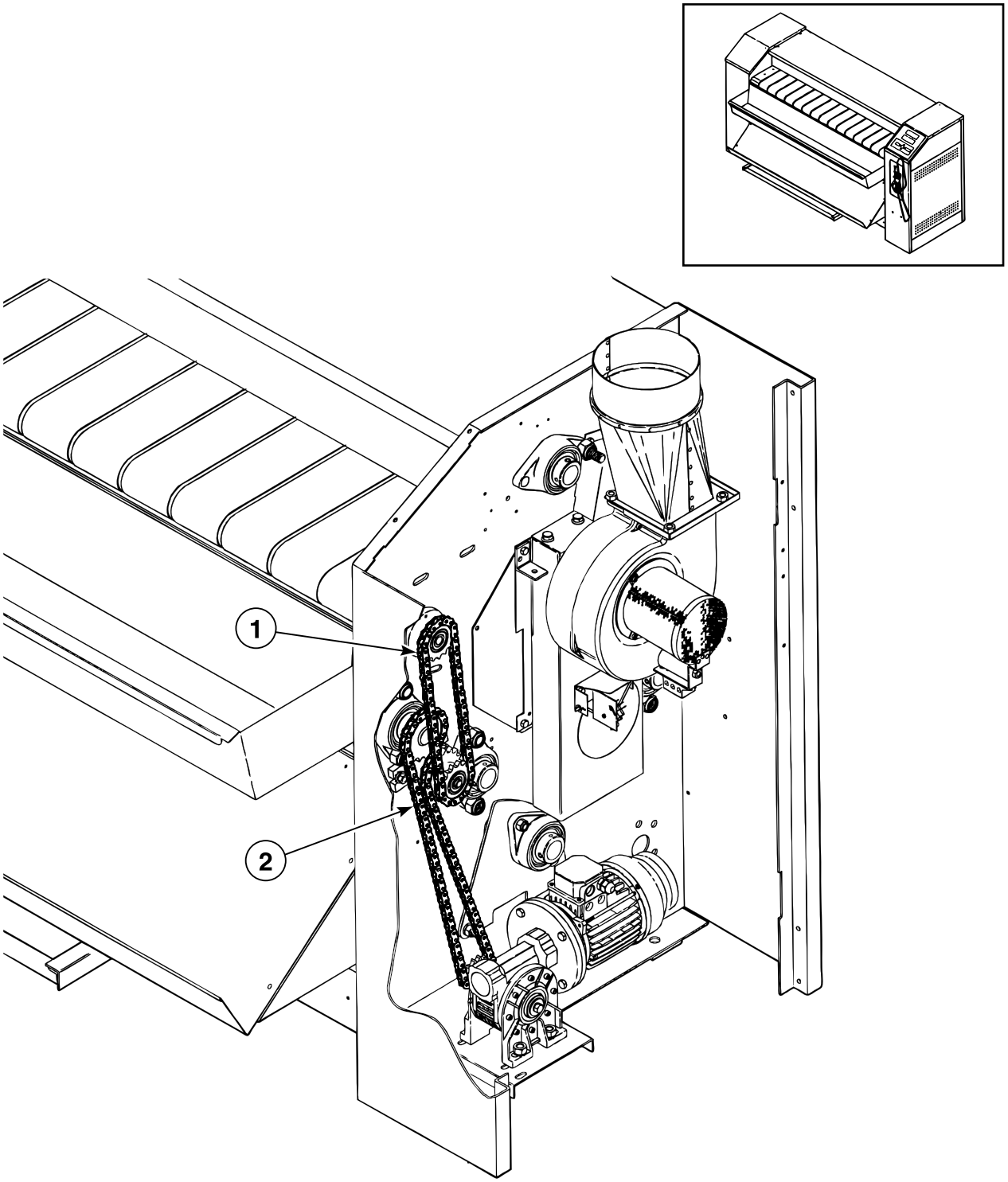

BE000005P_D0152

© Copyright, Alliance Laundry Systems LLC – DO NOT COPY or TRANSMIT

Driving Chains

REF	PART NO.	DESCRIPTION	COMMENTS
1	084/00008/00	Chain	775 mm
2	084/00007/00	Chain	1140 mm

© Copyright, Alliance Laundry Systems LLC – DO NOT COPY or TRANSMIT

Exhaust Channel

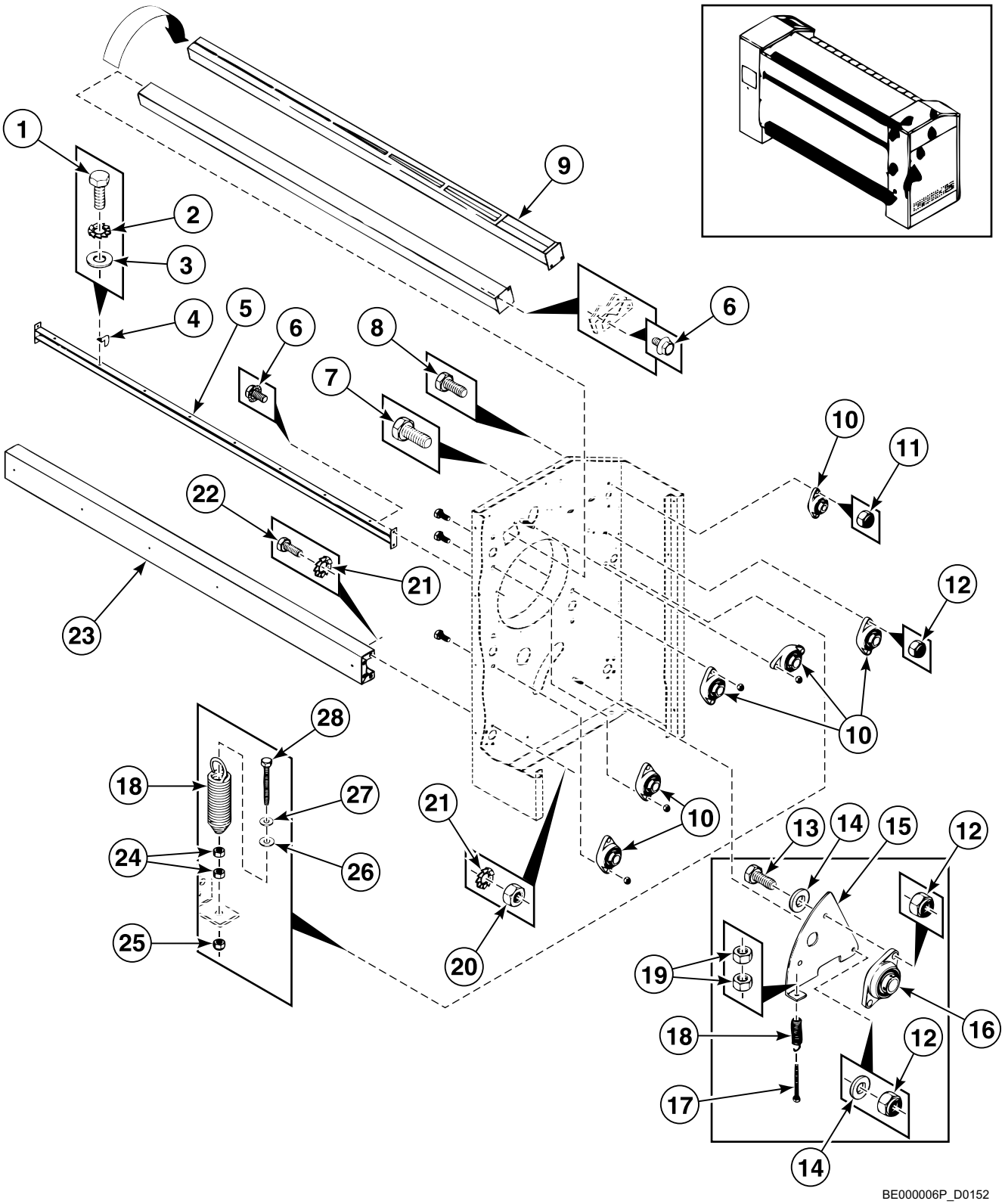

© Copyright, Alliance Laundry Systems LLC – DO NOT COPY or TRANSMIT

Exhaust Channel

REF	PART NO.	DESCRIPTION	COMMENTS
1	205/00106/00	Bolt	
2	203/00005/00	Washer	
3	201/00007/00	Washer	
4	083/00217/02	Separating Plate	
5	083/03217/00	Lathe	Model DI1400/4
	083/00217/00	Lathe	Model DI1800/4
	083/01217/00	Lathe	Model DI2200/4
6	206/00099/00	Bolt	
7	206/00112/00	Bolt	
8	205/00109/00	Screw	
9	083/03202/00	Exhaust	Model DI1400/4
	083/00202/00	Exhaust	Model DI1800/4
	083/01202/00	Exhaust	Model DI2200/4
10	084/00002/00	Ball Bearing	
11	204/00110/00	Nut	
12	204/00113/00	Nut	
13	206/00118/00	Screw	
14	201/00010/00	Washer	
15	081/00008/00	Belt Adjuster	Left
	081/00009/00	Belt Adjuster	Right
16	084/00026/00	Ball Bearing	
17	206/00073/00	Bolt	
18	226/00010/00	Motor Spring	
19	204/00004/00	Nut	
20	204/00003/00	Nut	
21	203/00002/00	Washer	
22	206/00006/00	Bolt	
23	081/03004/00	Crossbar	Model DI1400/4
	081/00004/00	Crossbar	Model DI1800/4
	081/01004/00	Crossbar	Model DI2200/4
24	204/00005/00	Nut	
25	204/00009/00	Nut	
26	202/00101/00	Washer	
27	203/00004/00	Washer	
28	206/00011/00	Bolt	

© Copyright, Alliance Laundry Systems LLC – DO NOT COPY or TRANSMIT

Exhaust Channel - Ribbon Guidance System Configuration

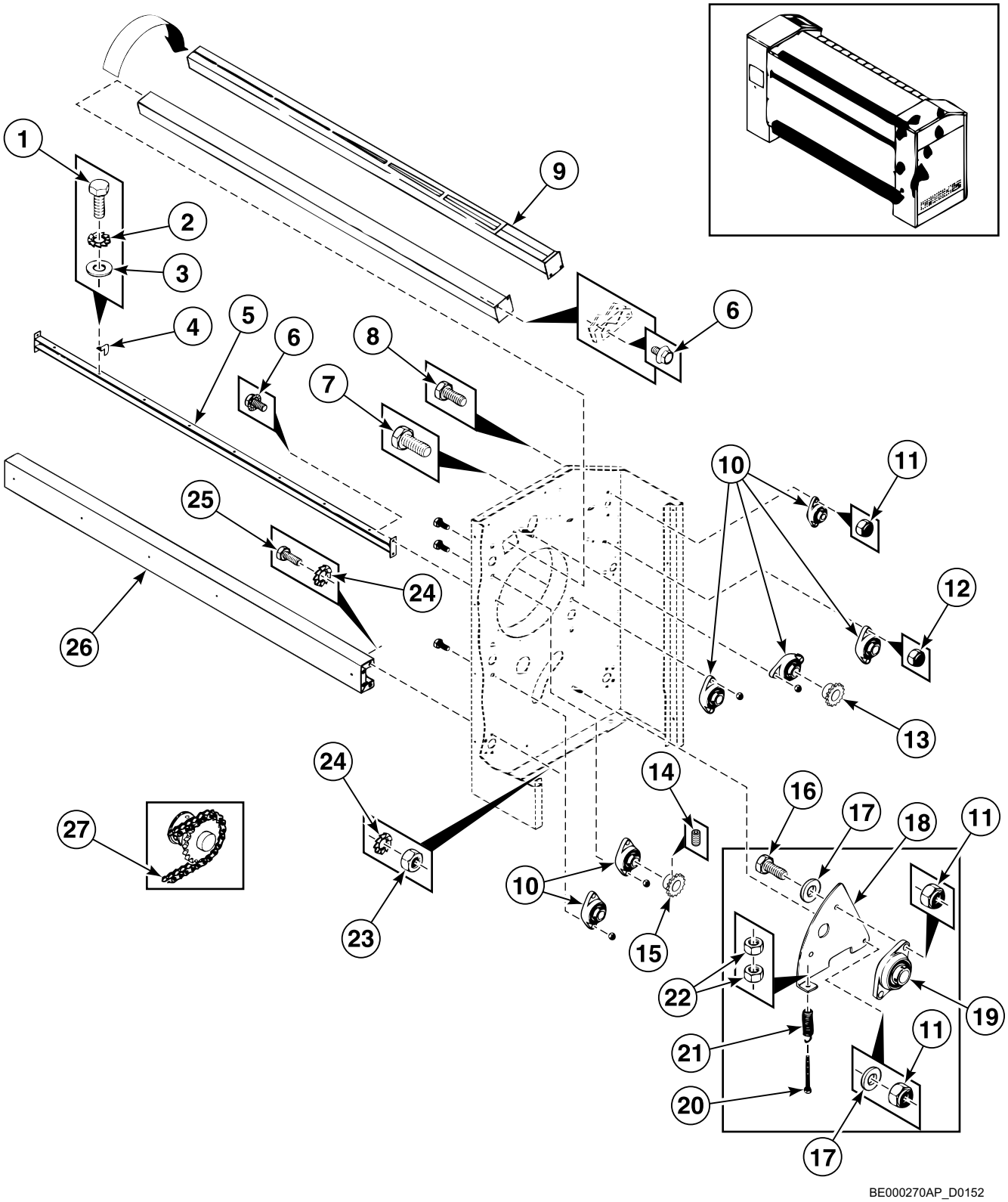

© Copyright, Alliance Laundry Systems LLC – DO NOT COPY or TRANSMIT

Exhaust Channel - Ribbon Guidance System Configuration

REF	PART NO.	DESCRIPTION	COMMENTS
1	205/00106/00	Bolt	
2	203/00005/00	Washer	
3	201/00007/00	Washer	
4	083/00217/02	Separating Plate	
5	083/03217/00	Lathe	Model DI1400/4
	083/00217/00	Lathe	Model DI1800/4
	083/01217/00	Lathe	Model DI2200/4
6	206/00099/00	Bolt	
7	206/00112/00	Bolt	
8	205/00109/00	Screw	
9	083/03202/00	Exhaust	Model DI1400/4
	083/00202/00	Exhaust	Model DI1800/4
	083/01202/00	Exhaust	Model DI2200/4
10	084/00002/00	Ball Bearing	
11	204/00110/00	Nut	
12	204/00113/00	Nut	
13	084/02011/00	Sprocket	
14	206/00031/00	Screw	
	206/00056/00	Screw	
15	084/00010/00	Sprocket	
16	206/00118/00	Screw	
17	201/00010/00	Washer	
18	081/00008/00	Belt Adjuster	Left
	081/00009/00	Belt Adjuster	Right
19	084/00026/00	Ball Bearing	
20	206/00073/00	Bolt	
21	226/00010/00	Motor Spring	
22	204/00004/00	Nut	
23	204/00003/00	Nut	
24	203/00002/00	Washer	
25	206/00006/00	Bolt	
26	081/03004/00	Crossbar	Model DI1400/4
	081/00004/00	Crossbar	Model DI1800/4
	081/01004/00	Crossbar	Model DI2200/4
27	084/00022/00	Chain	

© Copyright, Alliance Laundry Systems LLC – DO NOT COPY or TRANSMIT

Finger Protection Panel

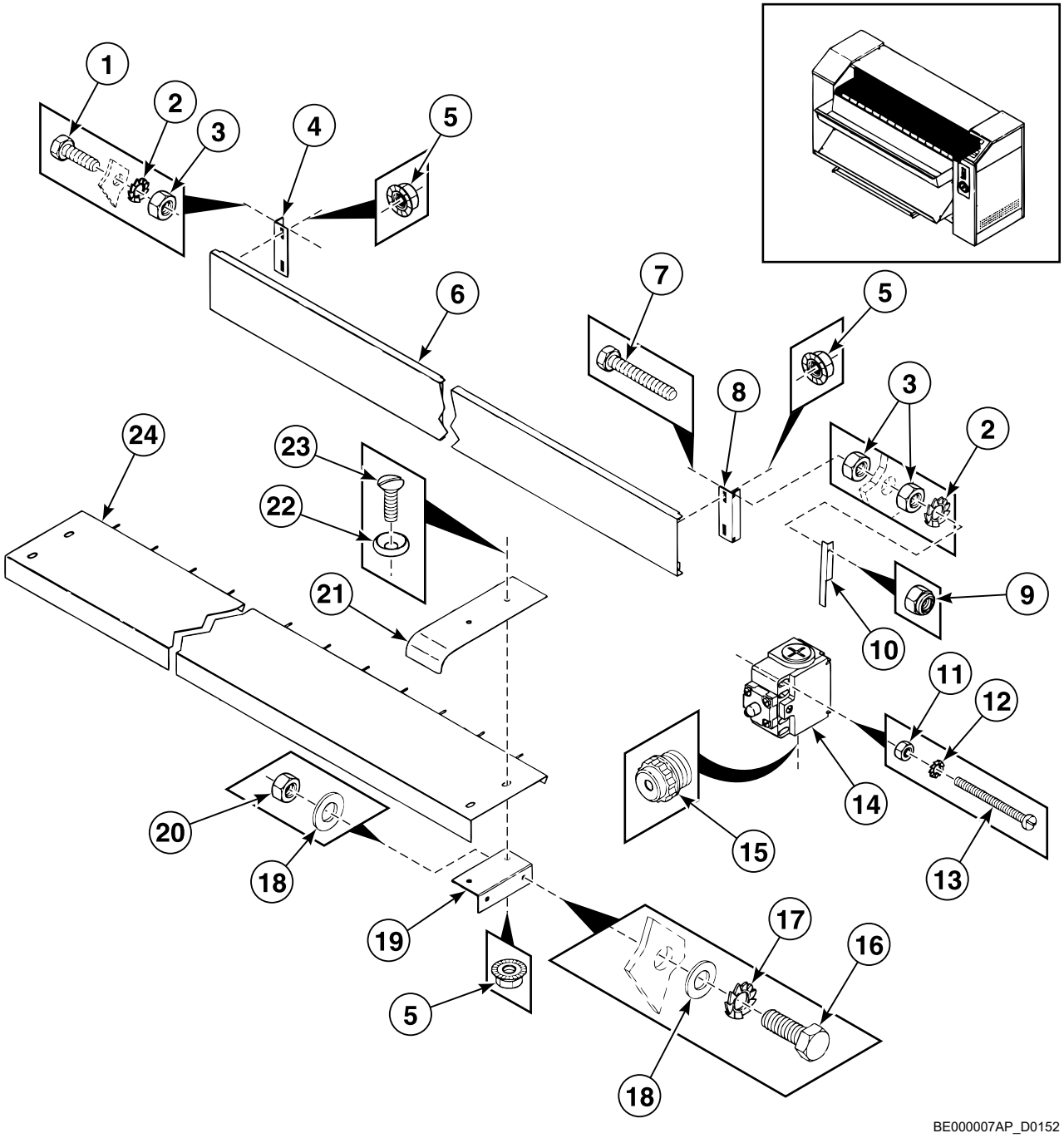

© Copyright, Alliance Laundry Systems LLC – DO NOT COPY or TRANSMIT

Finger Protection Panel

REF	PART NO.	DESCRIPTION	COMMENTS
1	206/00014/00	Bolt	
2	203/00004/00	Washer	
3	204/00005/00	Nut	
4	083/00210/06	Side Piece	Left
5	206/00101/00	Nut	
6	083/03210/00	Finger Protection Panel	Model DI1400/4
	083/00210/00	Finger Protection Panel	Model DI1800/4
	083/01210/00	Finger Protection Panel	Model DI2200/4
7	206/00011/00	Bolt	
8	083/00210/05	Side Piece	Right
9	204/00009/00	Nut	
10	083/00219/00	Microswitch	
11	202/00004/00	Washer	
12	203/00006/00	Washer	
13	207/00121/00	Screw	
14	209/00327/00	Limit Switch	
15	211/00132/00	Nut	
16	206/00006/00	Bolt	
17	203/00002/00	Washer	
18	201/00010/00	Washer	
19	083/00212/01	Feeding Table Support	
20	204/00003/00	Nut	
21	083/00220/00	Screen Plate	
22	208/00009/00	Washer	
23	207/00112/00	Screw	
24	083/03212/00	Feeding Table	Model DI1400/4
	083/00212/00	Feeding Table	Model DI1800/4
	083/01212/00	Feeding Table	Model DI2200/4

© Copyright, Alliance Laundry Systems LLC – DO NOT COPY or TRANSMIT

Pedal

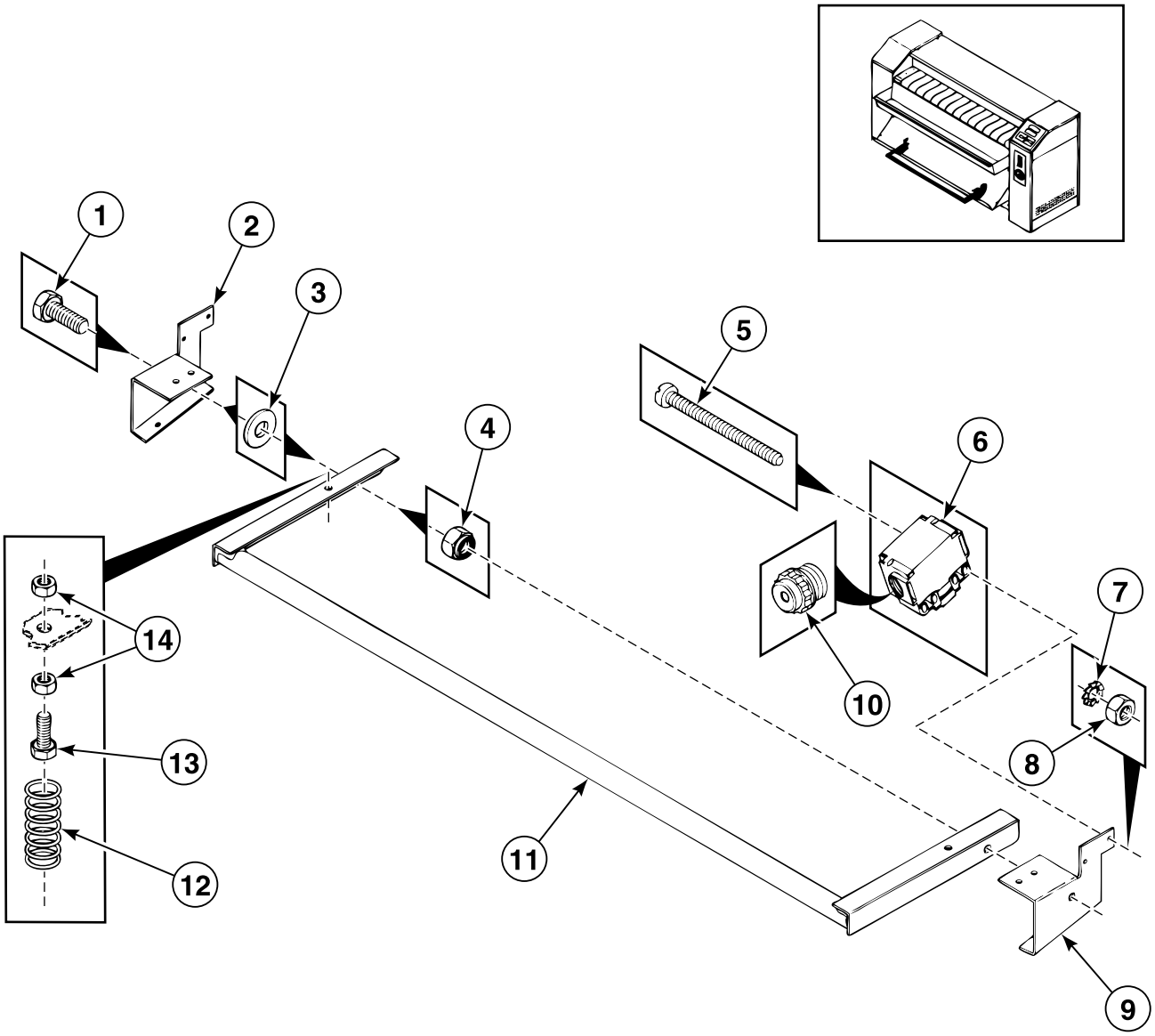

BE000008P_D0152

© Copyright, Alliance Laundry Systems LLC – DO NOT COPY or TRANSMIT

Pedal

REF	PART NO.	DESCRIPTION	COMMENTS
1	206/00006/00	Bolt	
2	081/00010/00	Pedal Support	Left
3	201/00010/00	Washer	
4	204/00110/00	Nut	
5	207/00021/00	Screw	
6	209/00327/00	Limit Switch	
7	203/00006/00	Washer	
8	204/00007/00	Nut	
9	081/00011/00	Pedal Support	Right
10	211/00132/00	Nut	
11	081/03020/00	Pedal	Model DI1400/4
	081/00020/00	Pedal	Model DI1800/4
	081/01020/00	Pedal	Model DI2200/4
12	084/00015/00	Compression Spring	
13	206/00009/00	Bolt	
14	204/00004/00	Nut	

© Copyright, Alliance Laundry Systems LLC – DO NOT COPY or TRANSMIT

Temperature Detection

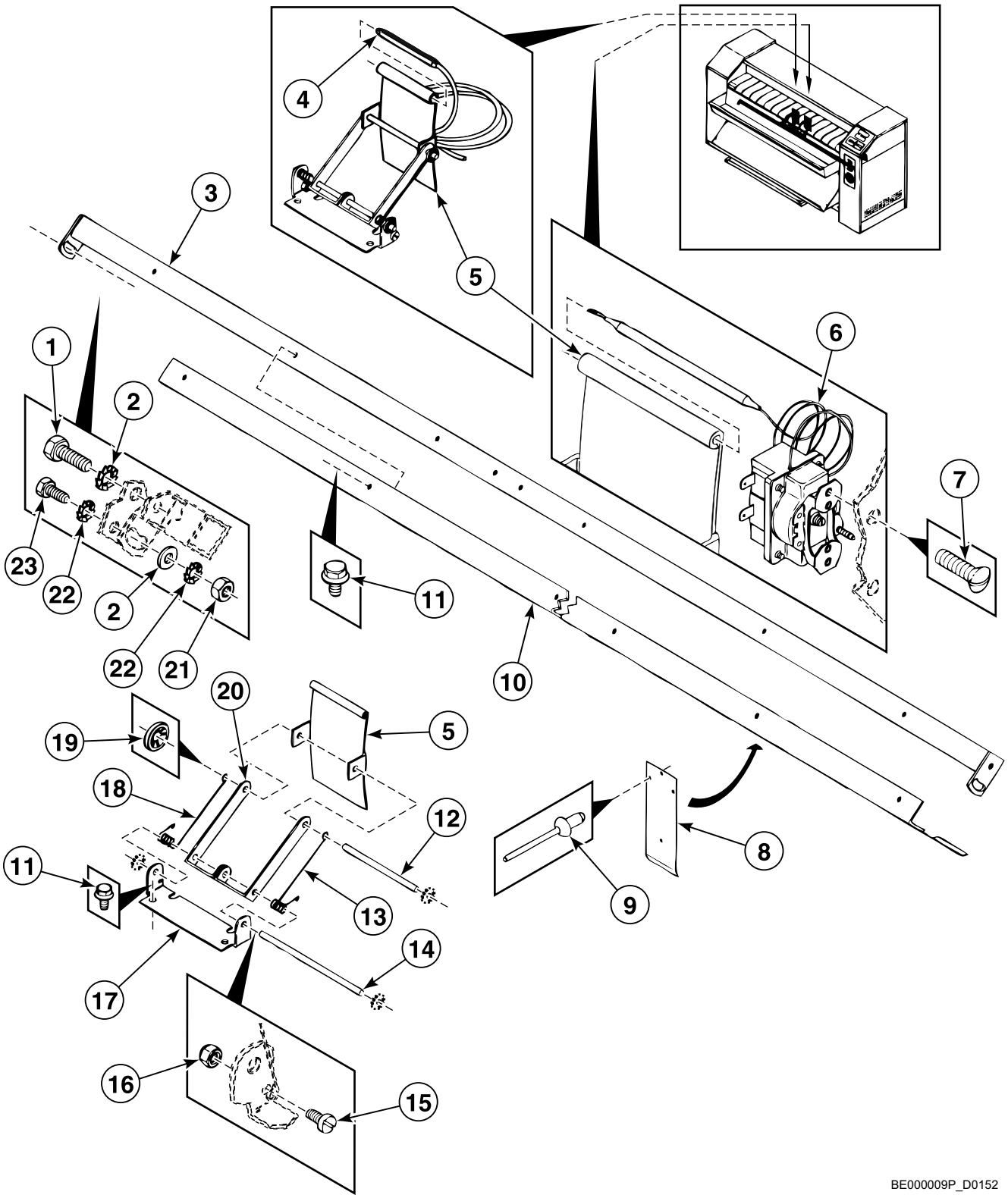

© Copyright, Alliance Laundry Systems LLC – DO NOT COPY or TRANSMIT

Temperature Detection

REF	PART NO.	DESCRIPTION	COMMENTS
1	206/00006/00	Bolt	
2	203/00002/00	Washer	
3	081/03025/20	Scraper Support	Model DI1400/4
	081/00025/20	Scraper Support	Model DI1800/4
	081/01025/20	Scraper Support	Model DI2200/4
4	085/00015/00	Thermostat	
5	081/00022/00	Thermostat Plate	
6	085/00146/190	Mounting Piece	
	271/46026/00	Safety Thermostat	
7	207/00120/00	Screw	
8	081/00025/02	Scraper	
9	208/00017/00	Rivet	
10	081/03025/05	Support Bracket	Model DI1400/4
	081/00025/05	Support Bracket	Model DI1800/4
	081/01025/05	Support Bracket	Model DI2200/4
11	206/00099/00	Bolt	
12	081/00024/00	Axle	
13	083/00242/00	Compression Spring	Right
14	081/00023/01	Hinge Pin	
15	207/00020/00	Screw	
16	204/00114/00	Nut	
17	083/00240/00	Mounting Piece	
18	083/00241/00	Compression Spring	Left
19	208/00022/00	Nut	
20	083/00239/00	Thermostat Bracket	
21	204/00004/00	Nut	
22	203/00003/00	Washer	
23	206/00042/00	Bolt	

© Copyright, Alliance Laundry Systems LLC – DO NOT COPY or TRANSMIT

Operating Panel

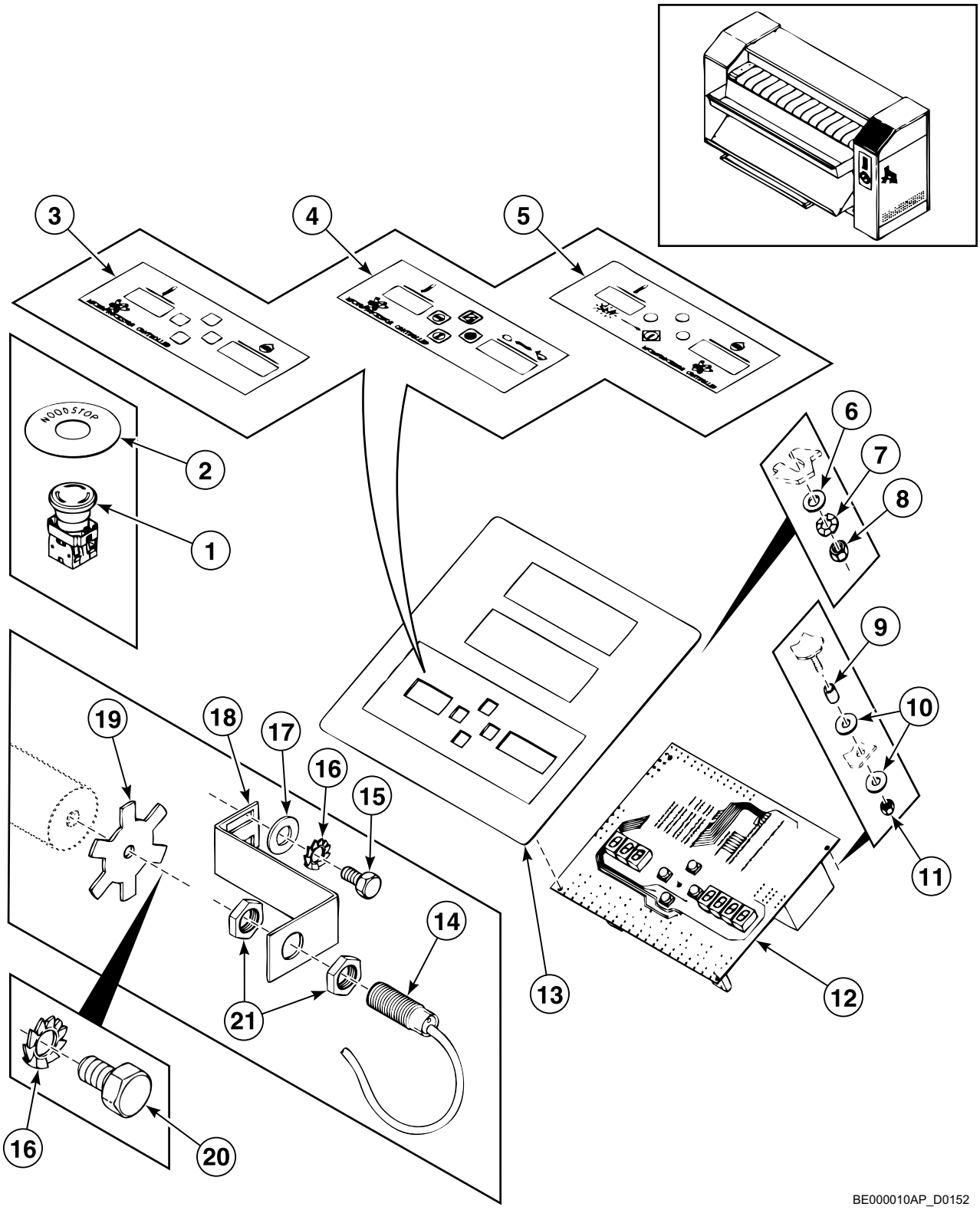

© Copyright, Alliance Laundry Systems LLC – DO NOT COPY or TRANSMIT

Operating Panel

REF	PART NO.	DESCRIPTION	COMMENTS
1	209/00248/20	Mushroom Pushbutton	
2	209/00329/00	Circular Disk	No Stop
	209/00330/00	Circular Disk	No Stop
	209/00331/00	Circular Disk	Emergency Stop
	209/00332/00	Circular Disk	Emergency Stop
3	229/00256/00	Control Pad	Coin
4	229/00247/00	Control Pad	OPL
5	229/00275/00	Payment System Label	Coin
6	202/00004/00	Washer	
7	203/00006/00	Washer	
8	204/00007/00	Nut	
9	221/00116/00	Tube	
10	223/00123/00	Washer	
11	204/00008/00	Nut	
12	209/00397/10	Conversion Kit	
13	081/00014/00	Operating Panel	
14	209/00400/00	Speed Detector	
15	206/00015/00	Bolt	
16	203/00004/00	Washer	
17	202/00101/00	Washer	
18	083/00243/00	Support Bracket	
19	083/00244/00	Disk	
20	205/00107/00	Bolt	
21	204/00002/00	Nut	

© Copyright, Alliance Laundry Systems LLC – DO NOT COPY or TRANSMIT

Coin Meter

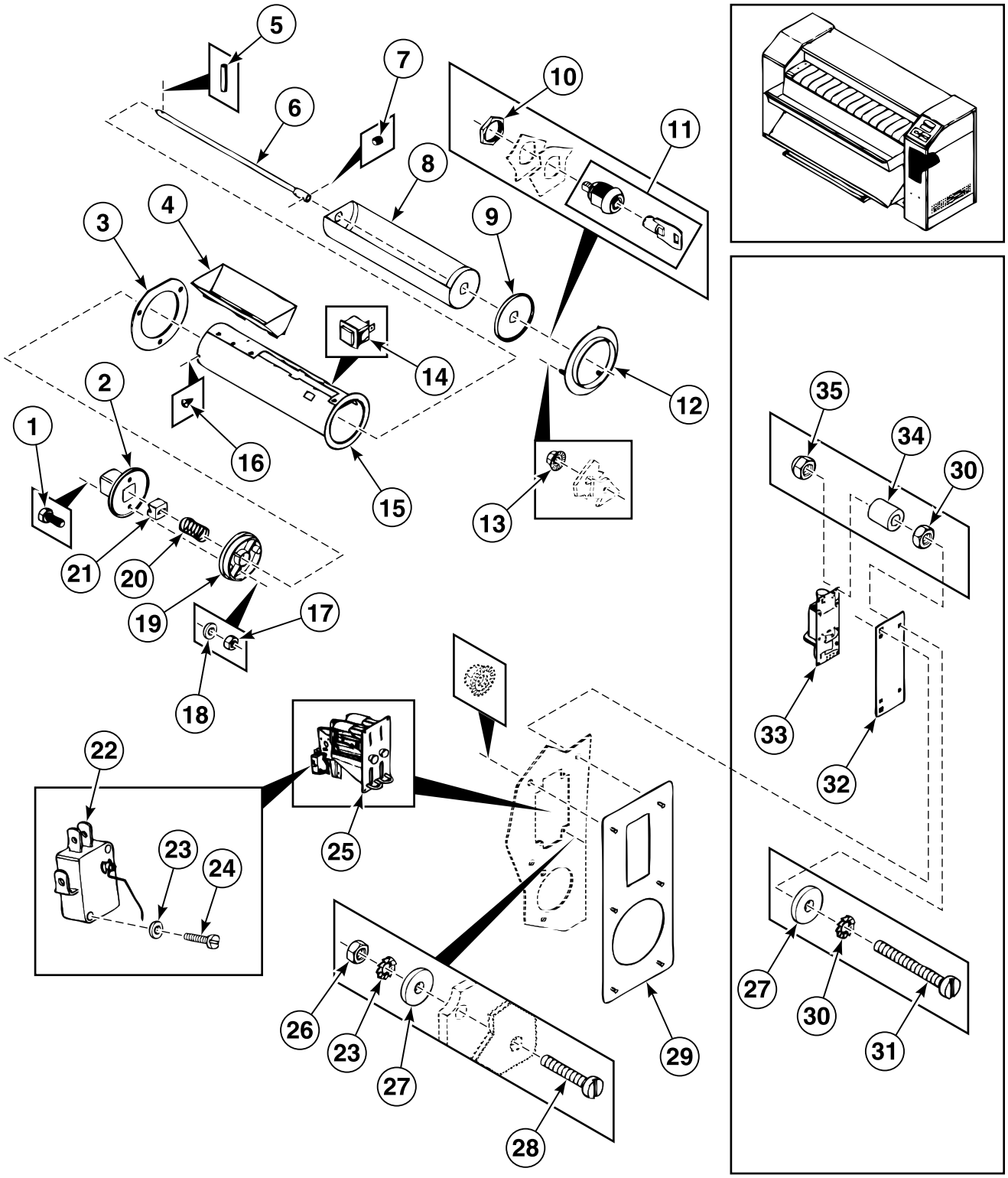

BE000011P_D0152

© Copyright, Alliance Laundry Systems LLC – DO NOT COPY or TRANSMIT

Coin Meter

REF	PART NO.	DESCRIPTION	COMMENTS
1	206/00033/00	Bolt	
2	211/00070/01	Outer Cabinet Lock	
3	111/00100/00	Coin Box Ring Assembly	
4	211/00071/00	Coin Box	
5	208/00013/00	Roll Pin	
6	111/00069/00	Spindle	
7	206/00038/00	Screw	
8	211/00101/00	Coin Box	
9	111/00068/00	Front Plate	
10	211/00065/01	Nut	
11	211/00065/00	Coin Box Lock	
12	111/00066/00	Coin Box Ring	
13	206/00101/00	Nut	
14	209/00396/00	Pushbutton	
15	211/00100/00	Outer Coin Box	
16	208/00007/00	Screw	
17	204/00005/00	Nut	
18	203/00004/00	Washer	
19	211/00070/03	Inner Coin Box	
20	211/00070/04	Spring	
21	211/00070/02	Washer	
22	209/00060/12	Coin Drop Microswitch	
23	203/00007/00	Washer	
24	207/00009/00	Screw	
25	209/00305/00	Coin Meter	
26	204/00008/00	Nut	
27	202/00004/00	Washer	
28	207/00108/00	Screw	
29	083/00233/00	Support Plate	
30	203/00006/00	Washer	
31	207/00031/00	Screw	
32	111/00953/00	Assembly Plate	
33	209/00451/00	Printboard	
34	211/00122/00	Standoff	
35	204/00114/00	Nut	

© Copyright, Alliance Laundry Systems LLC – DO NOT COPY or TRANSMIT

Coupling

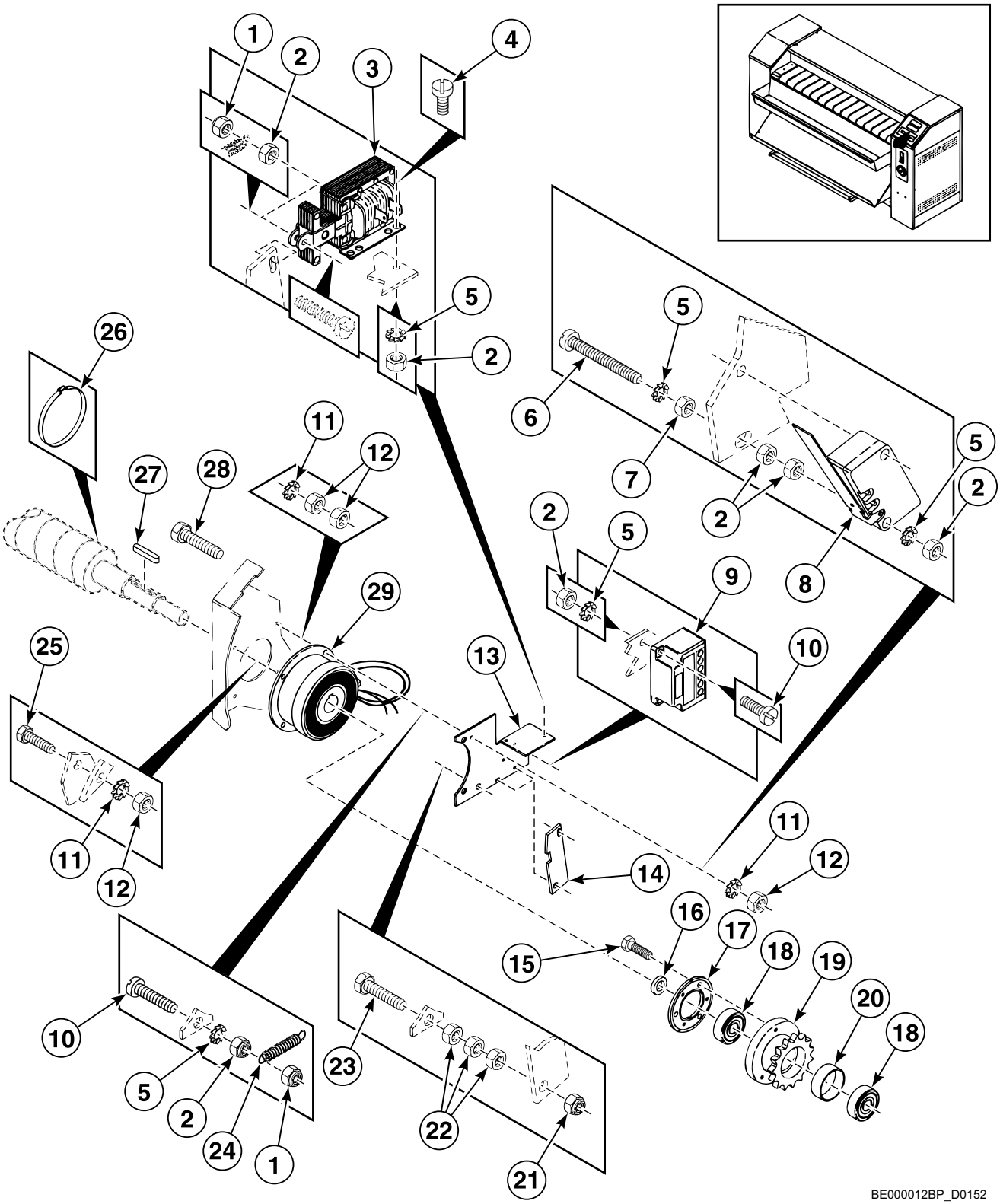

© Copyright, Alliance Laundry Systems LLC – DO NOT COPY or TRANSMIT

Coupling

REF	PART NO.	DESCRIPTION	COMMENTS
1	204/00116/00	Nut	
2	204/00008/00	Nut	
3	209/00017/00	Door Interlock Coil	
4	207/00010/00	Screw	
5	203/00007/00	Washer	
6	207/00014/00	Screw	
7	202/00004/00	Washer	
8	209/00334/00	Microswitch	
9	085/00001/02	Rectifier	
10	207/00022/00	Screw	
11	203/00005/00	Washer	
12	204/00107/00	Nut	
13	083/00234/01	Support Bracket	
14	083/00234/02	Hook Lock Plate	
15	205/00113/00	Bolt	
16	080/00003/01	Ring	
17	085/00001/01	Clutch Disc	
18	215/00010/00	Ball Bearing	
19	084/00013/00	Chain Wheel	
20	084/00032/00	Ring	
21	204/00009/00	Nut	
22	204/00005/00	Nut	
23	206/00114/00	Bolt	
24	224/00043/00	Interlock Coil Spring	
25	205/00106/00	Bolt	
26	082/00010/00	Hose Clamp	
27	216/00008/00	Pin	
28	205/00108/00	Bolt	
29	085/00001/00	Clutch	

© Copyright, Alliance Laundry Systems LLC – DO NOT COPY or TRANSMIT

Motor

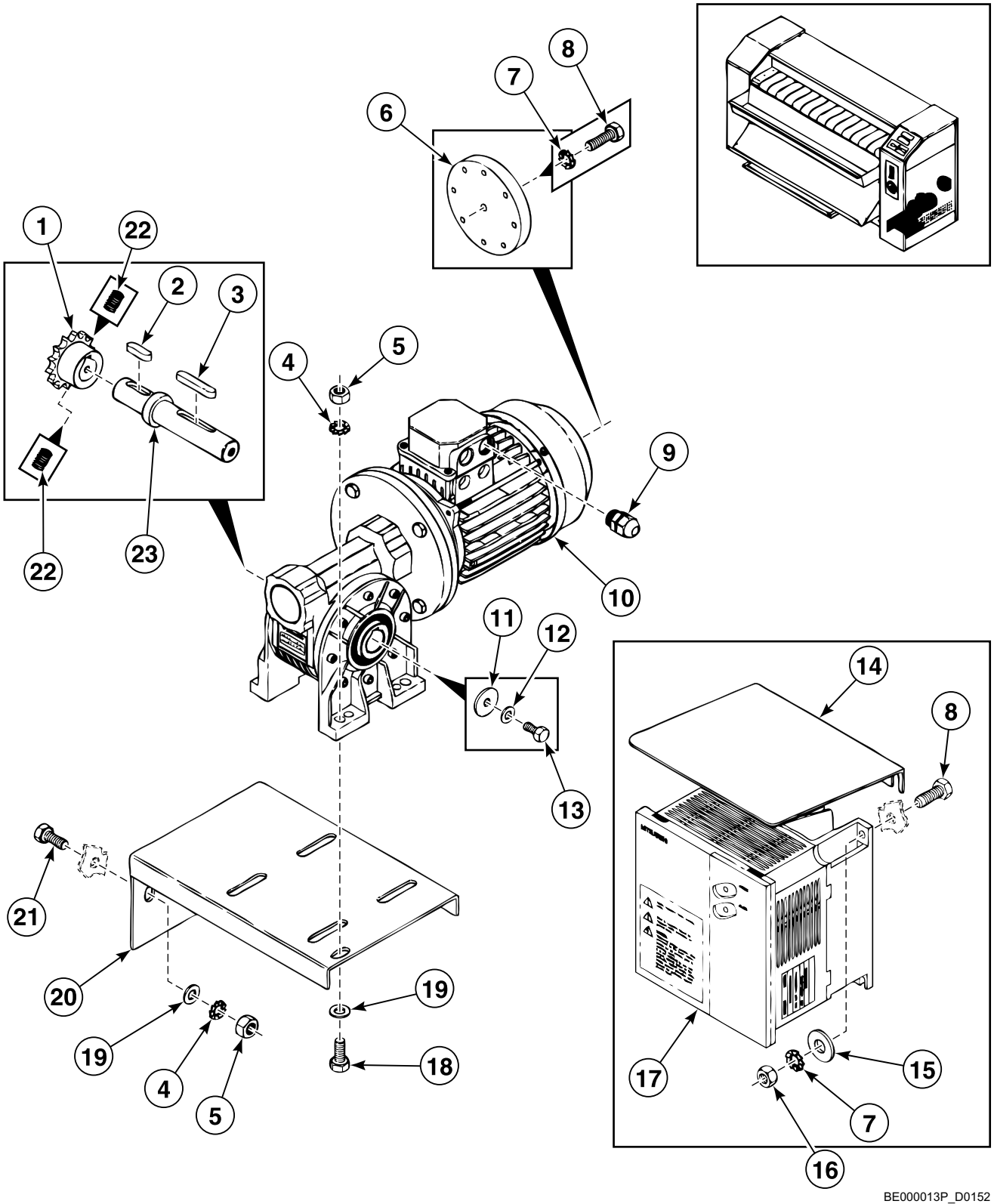

© Copyright, Alliance Laundry Systems LLC – DO NOT COPY or TRANSMIT

Motor

REF	PART NO.	DESCRIPTION	COMMENTS
1	084/00009/00	Sprocket	
2	084/00006/02	Pin	
3	084/00006/01	Pin	
4	203/00002/00	Washer	
5	204/00003/00	Nut	
6	084/00005/01	Disk	
7	203/00005/00	Washer	
8	205/00106/00	Bolt	
9	211/00117/00	Cordlock	
10	085/00003/00	Motor	.37 kW
11	084/00006/03	Washer	
12	203/00003/00	Washer	
13	206/00010/00	Bolt	
14	083/00247/10	Cap	
15	202/00101/00	Washer	
16	204/00107/00	Nut	
17	227/00228/00	Inverter Drive	
	227/00227/00	Inverter	0.4 kW
18	206/00005/00	Bolt	
19	201/00010/00	Washer	
20	081/00027/00	Support Bracket	
	081/01027/00	Support Bracket	
21	206/00006/00	Bolt	
22	206/00056/00	Screw	
23	084/00006/00	Axle	24 mm
	084/01006/10	Axle	25 mm

© Copyright, Alliance Laundry Systems LLC – DO NOT COPY or TRANSMIT

Draught Valve

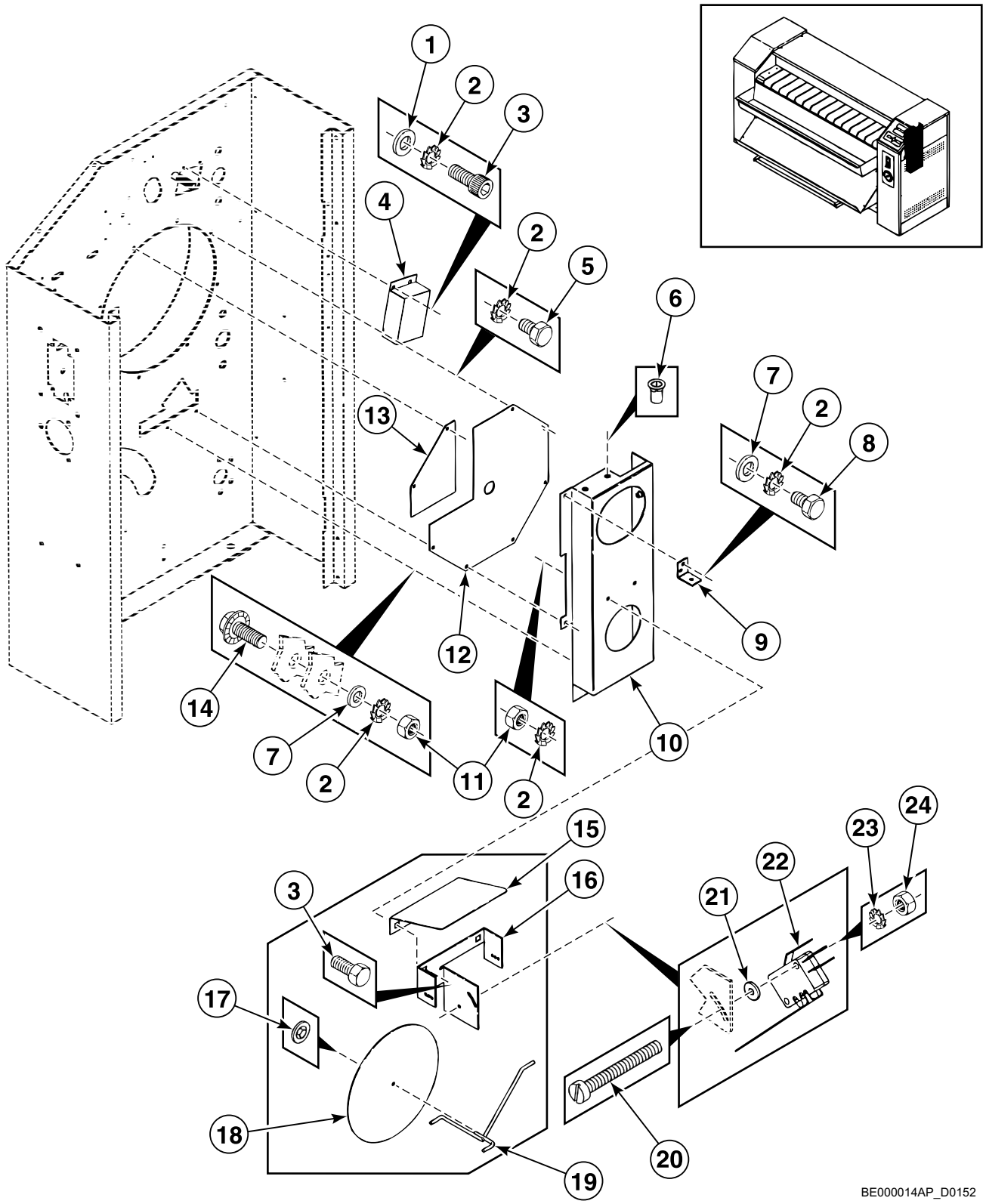

© Copyright, Alliance Laundry Systems LLC – DO NOT COPY or TRANSMIT

Draught Valve

REF	PART NO.	DESCRIPTION	COMMENTS
1	202/00101/00	Washer	
2	203/00004/00	Washer	
3	206/00113/00	Screw	
4	083/00206/00	Connecting Piece	
5	206/00015/00	Bolt	
6	204/00302/00	Nut	
7	201/00007/00	Washer	
8	206/00013/00	Bolt	
9	083/00253/00	Spring	
10	083/00208/00	Vacuum Chamber	
11	204/00005/00	Nut	
12	083/00209/00	Side Plate	
13	083/00223/00	Side Panel	
14	206/00099/00	Bolt	
15	083/00245/00	Cap	
16	083/00008/00	Support Bracket	
17	208/00018/00	Fastener	
18	083/00204/00	Valve	
19	083/00205/00	Hook	
20	207/00108/00	Screw	
21	223/00123/00	Washer	
22	271/36954/00	Microswitch	
23	203/00007/00	Washer	
24	204/00008/00	Nut	

© Copyright, Alliance Laundry Systems LLC – DO NOT COPY or TRANSMIT

Fan

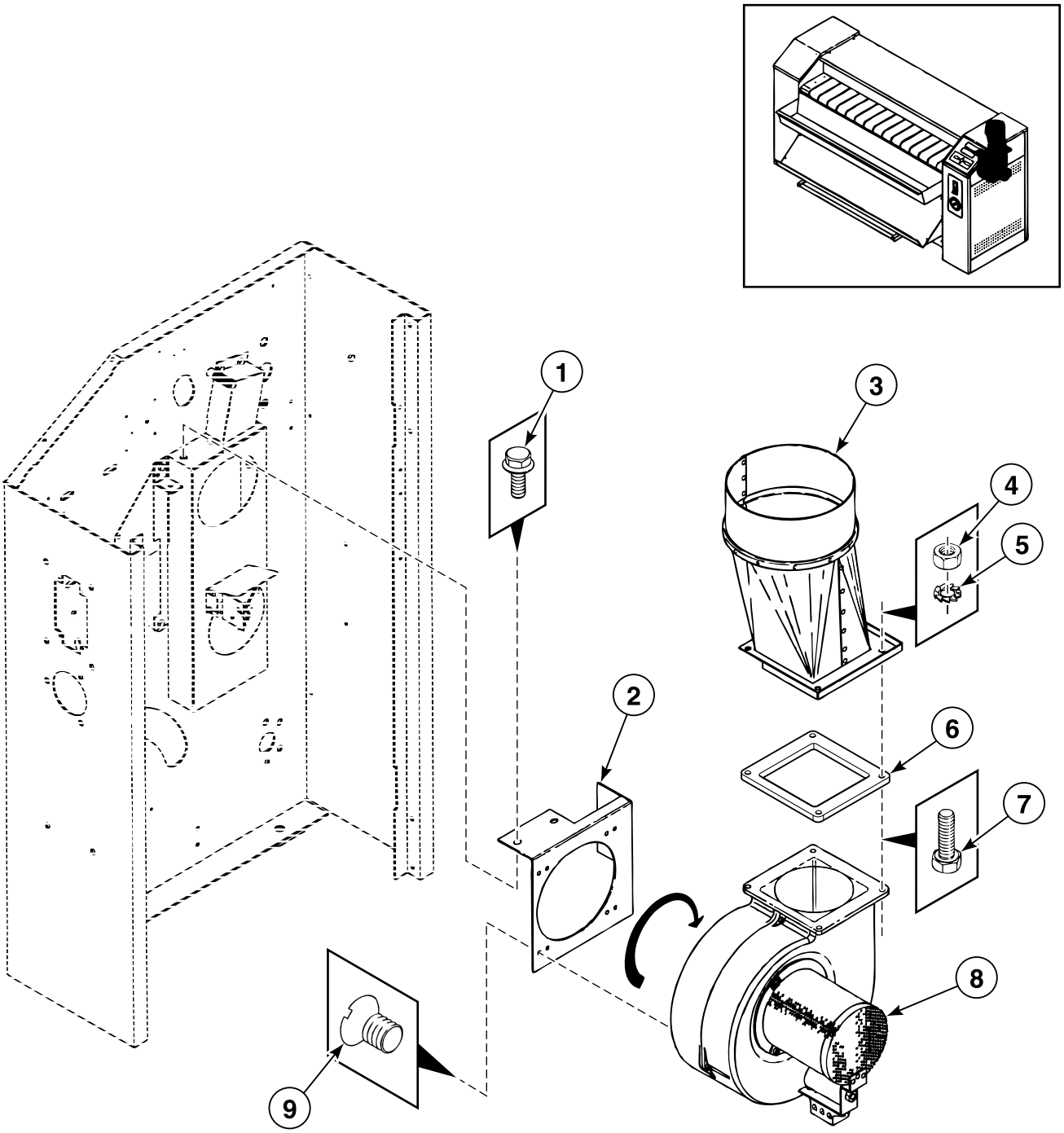

BE000015AP_D0152

© Copyright, Alliance Laundry Systems LLC – DO NOT COPY or TRANSMIT

Fan

REF	PART NO.	DESCRIPTION	COMMENTS
1	206/00099/00	Bolt	
2	083/00235/00	Support Plate	
3	085/00002/06	Cylinder	
4	204/00005/00	Nut	
5	203/00004/00	Washer	
6	084/00024/00	Gasket	
7	206/00033/00	Bolt	
8	085/00002/05	Fan	
9	207/00005/00	Screw	

© Copyright, Alliance Laundry Systems LLC – DO NOT COPY or TRANSMIT

Gas Heating System

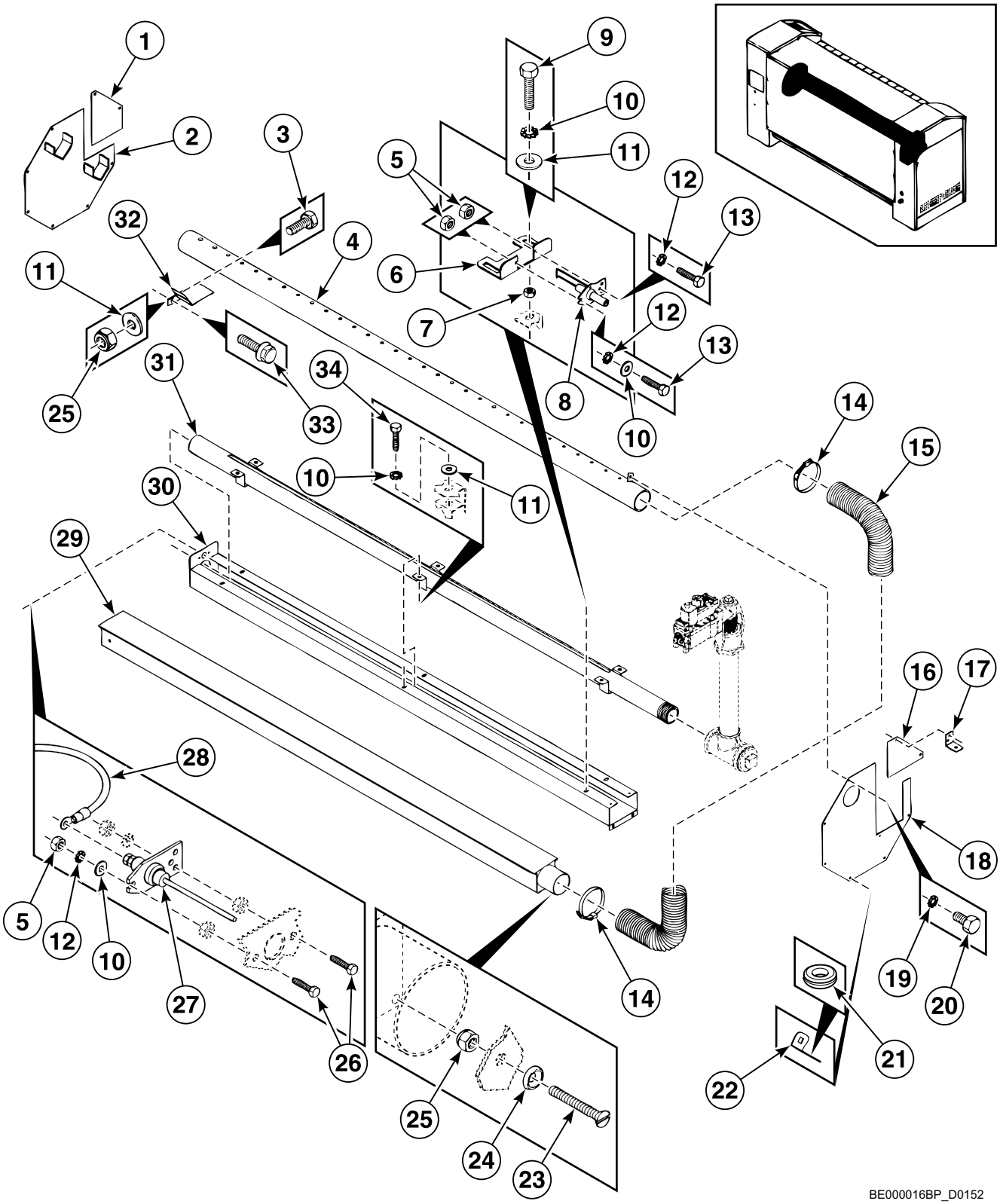

© Copyright, Alliance Laundry Systems LLC – DO NOT COPY or TRANSMIT

Gas Heating System

REF	PART NO.	DESCRIPTION	COMMENTS
1	083/00223/00	Side Panel	
2	083/00222/00	Side Plate	
	083/01222/00	Side Plate	
3	206/00014/00	Bolt	
4	083/03009/00	Exhaust	Model DI1400/4
	083/00009/00	Exhaust	Model DI1800/4
	083/01009/00	Exhaust	Model DI2200/4
5	204/00007/00	Nut	
6	083/00226/00	Support Bracket	
7	204/00005/00	Nut	
8	085/00014/00	Ignition Electrode	
9	206/00086/00	Screw	
10	203/00004/00	Washer	
11	201/00007/00	Washer	
12	203/00006/00	Washer	
13	205/00113/00	Bolt	
14	223/00014/00	Hose Clamp	
15	084/00018/00	Exhaust Pipe	
16	083/00221/10	Side Plate	
	083/01221/10	Side Plate	
17	083/00253/00	Spring	
18	083/00221/00	Side Plate	
	083/01221/00	Side Plate	
19	203/00010/00	Washer	
20	205/00107/00	Bolt	
21	211/10109/00	Clip	
	211/10109/01	Clip	
22	083/00229/00	Hook	
23	207/00119/00	Screw	
24	208/00009/00	Washer	
25	204/00009/00	Nut	
26	206/00088/00	Bolt	
27	085/00013/00	Electrode	
28	085/00012/04A	Cable	
29	083/03227/00	Exhaust	Model DI1400/4
	083/00227/00	Exhaust	Model DI1800/4
	083/01227/00	Exhaust	Model DI2200/4
30	083/03224/00	Gas Burner	Model DI1400/4
	083/00224/00	Gas Burner	Model DI1800/4
	083/01224/00	Gas Burner	Model DI2200/4
31	084/03016/00	Gas Burner	Model DI1400/4
	084/00016/00	Gas Burner	Model DI1800/4
	084/01016/00	Gas Burner	Model DI2200/4
32	083/00202/04	Support Bracket	
33	206/00099/00	Bolt	
34	206/00105/00	Nut	

© Copyright, Alliance Laundry Systems LLC – DO NOT COPY or TRANSMIT

Gas Valve

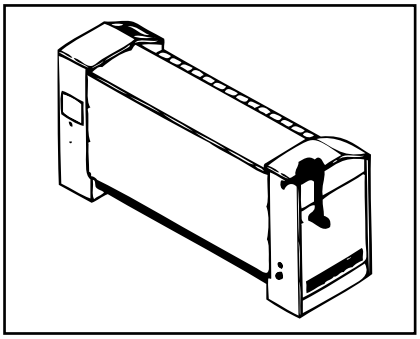

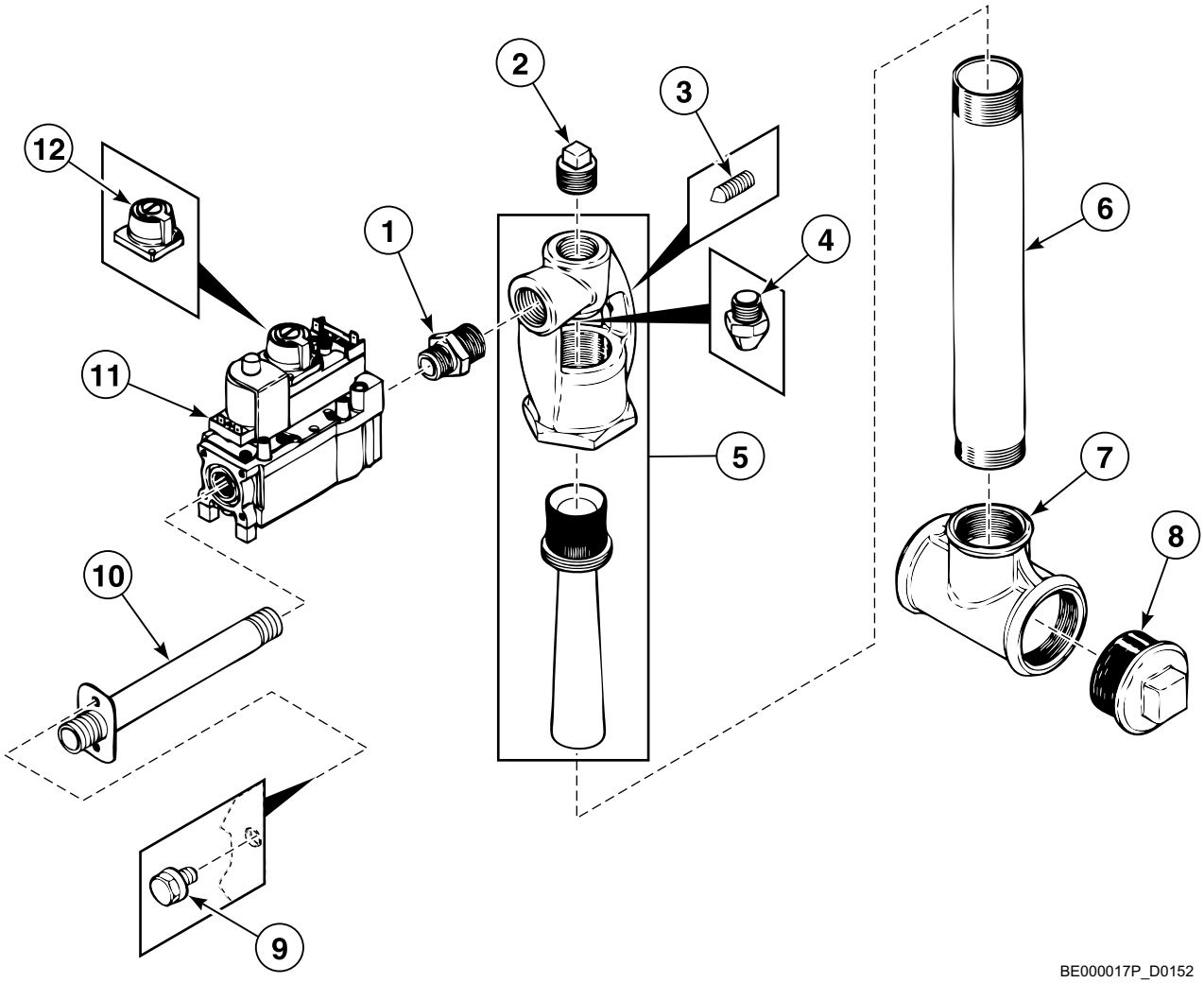

© Copyright, Alliance Laundry Systems LLC – DO NOT COPY or TRANSMIT

Gas Valve

REF	PART NO.	DESCRIPTION	COMMENTS
1	710/00032/09	Reducing Nipple	
2	710/00026/06	Socket	
3	084/00020/02	Screw	
4	084/00020/11	Injection Piece	
5	084/00020/00	Valve	
6	084/00017/00	Tube	
7	710/00011/06	Pipe	
8	710/00026/02	Socket	
9	206/00099/00	Bolt	
10	084/00021/01	Screw	
11	085/00010/00	Gas Valve	
12	085/00010/01	Gas Conversion Kit	Liquid Petroleum

© Copyright, Alliance Laundry Systems LLC – DO NOT COPY or TRANSMIT

Ignition Box

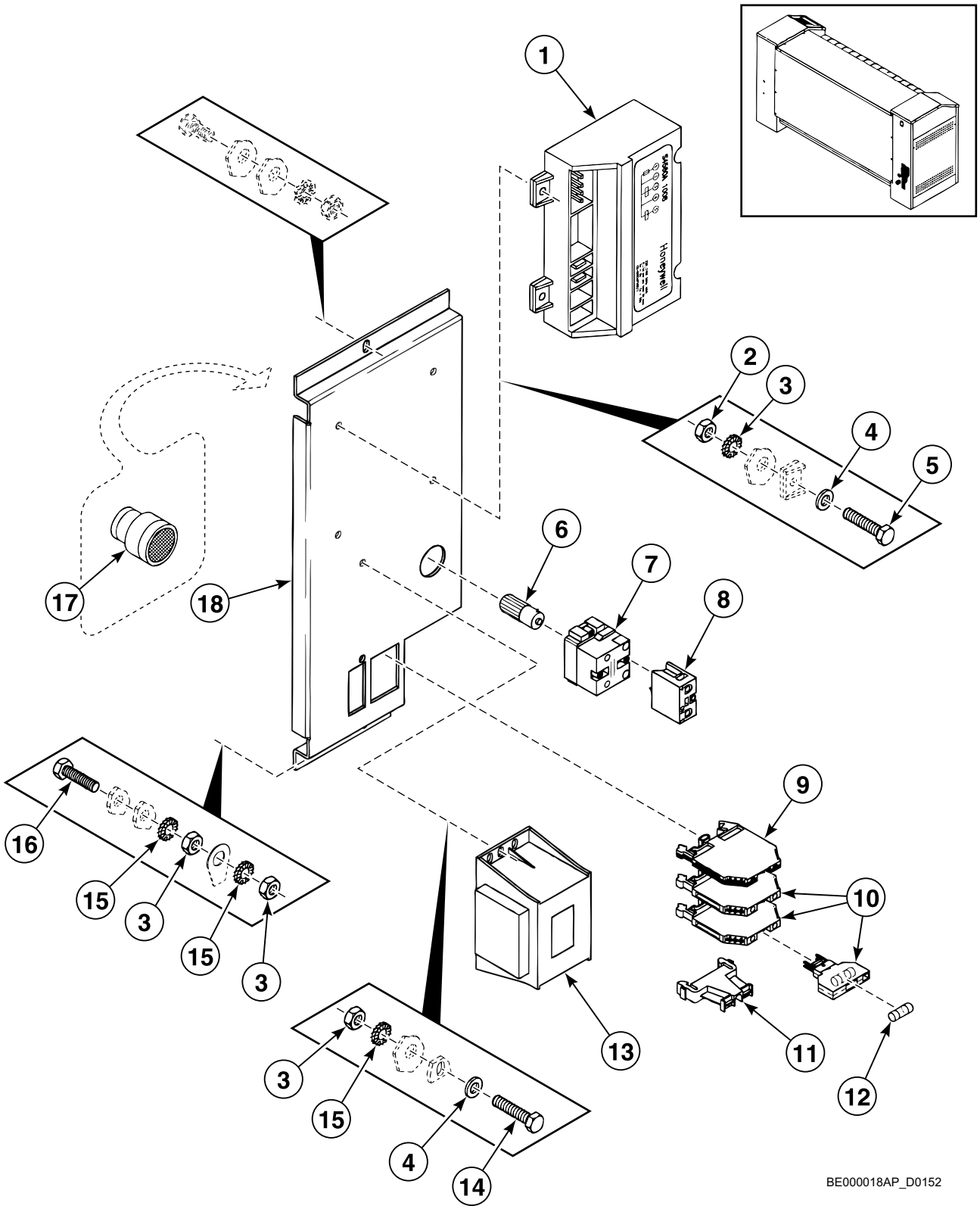

© Copyright, Alliance Laundry Systems LLC – DO NOT COPY or TRANSMIT

Ignition Box

REF	PART NO.	DESCRIPTION	COMMENTS
1	085/00009/00	Ignition Box	
2	204/00008/00	Nut	
3	203/00007/00	Washer	
4	202/00004/00	Washer	
5	207/00009/00	Screw	
6	Z07705189	Bolt	
7	209/00254/00	Pushbutton	
8	209/00099/06	Contact Switch	
	209/00099/27	Contact	
9	209/00318/06	Clamp	
10	209/00318/02	Clamp	
11	209/00319/00	Clamp	
12	209/00412/00	Fuse	
13	085/00011/00	Transformer	
14	206/00027/00	Bolt	
15	203/00006/00	Washer	
16	205/00113/00	Bolt	
17	209/00254/21	Pushbutton	
18	083/00230/00	Plate Assembly	

© Copyright, Alliance Laundry Systems LLC – DO NOT COPY or TRANSMIT

Electric Heating System (Drawing 1 of 2)

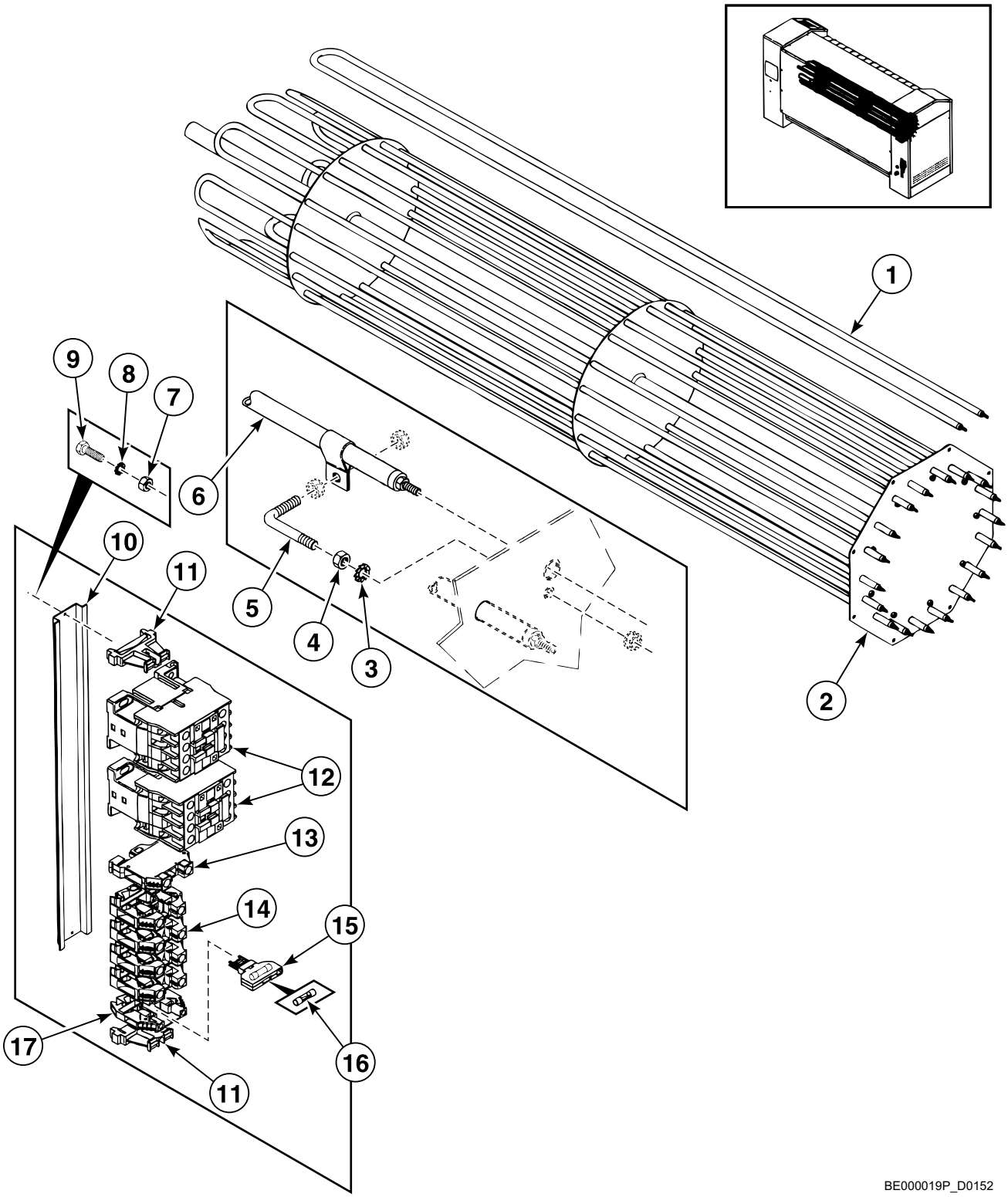

© Copyright, Alliance Laundry Systems LLC – DO NOT COPY or TRANSMIT

Electric Heating System (Drawing 1 of 2)

REF	PART NO.	DESCRIPTION	COMMENTS
1	085/00008/00	Heating Element	
	085/01008/00	Heating Element	
	085/03008/00	Heating Element	
2	081/00026/00	Support Bracket	
3	203/00005/00	Washer	
4	204/00006/00	Nut	
5	083/00208/02	Hook	
6	083/00208/01	Clamping Bracket	
7	204/00007/00	Nut	
8	203/00006/00	Washer	
9	205/00113/00	Bolt	
10	720/00110/01	Rail	
11	209/00319/00	Clamp	
12	209/00148/02	Contactor	
	209/00177/02	Contactor	
	209/00411/04	Contactor	
13	209/00317/04	Clamp	
14	209/00317/01	Clamp	
15	209/00318/02	Clamp	
16	209/00412/00	Fuse	
17	209/00318/01	Clamp	

© Copyright, Alliance Laundry Systems LLC – DO NOT COPY or TRANSMIT

Electric Heating System (Drawing 2 of 2)

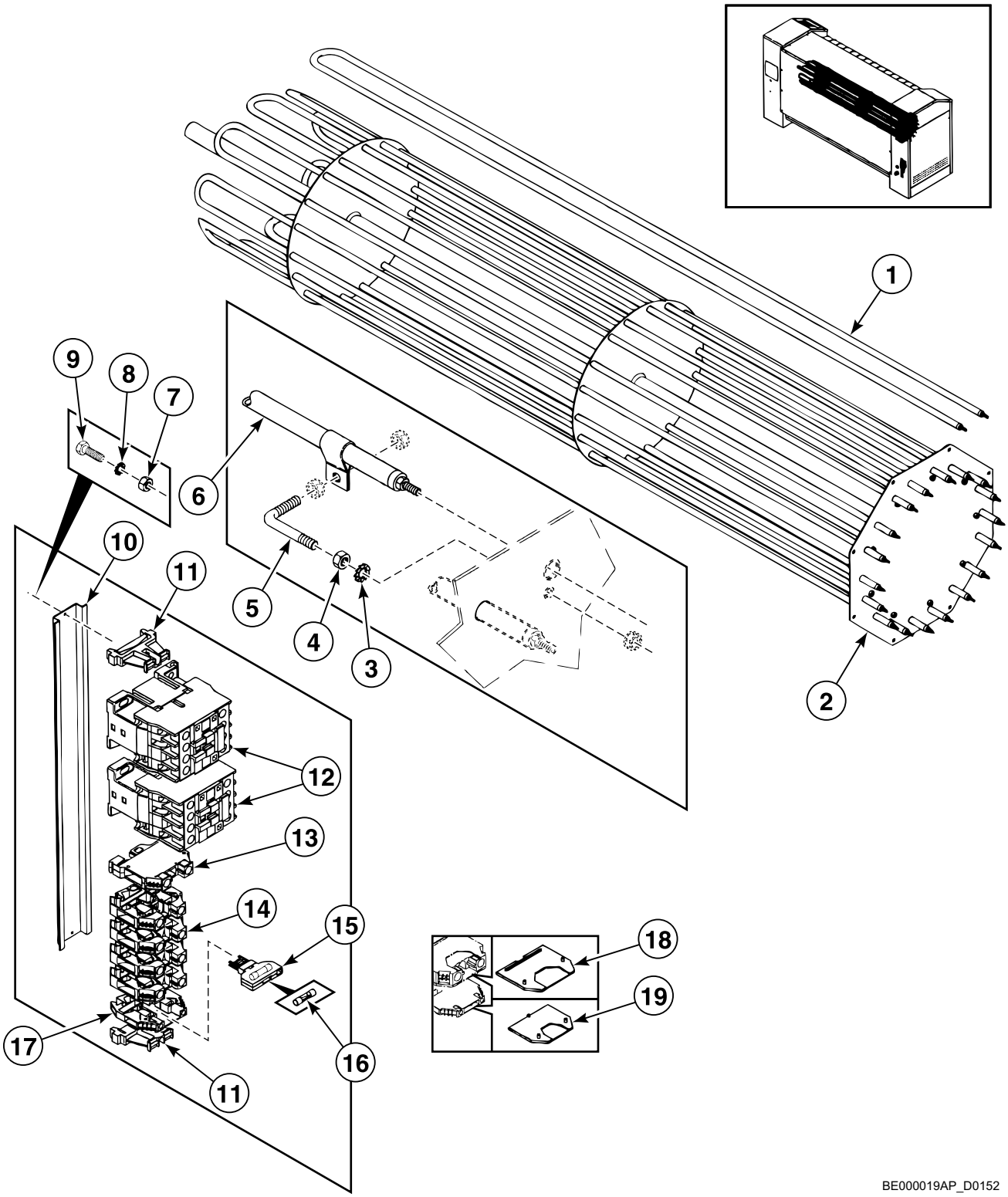

© Copyright, Alliance Laundry Systems LLC – DO NOT COPY or TRANSMIT

Electric Heating System (Drawing 2 of 2)

REF	PART NO.	DESCRIPTION	COMMENTS
1	085/00008/00	Heating Element	
	085/01008/00	Heating Element	
	085/03008/00	Heating Element	
2	081/00026/10	Support Bracket	
	081/01026/10	Support Bracket	
	081/03026/10	Support Bracket	
3	203/00005/00	Washer	
4	204/00006/00	Nut	
5	083/00208/02	Hook	
6	083/00208/01	Clamping Bracket	
7	204/00007/00	Nut	
8	203/00006/00	Washer	
9	205/00113/00	Bolt	
10	720/00110/01	Rail	
11	209/00319/00	Clamp	
12	209/00041/04	Contactor	
	209/00148/02	Contactor	
	209/00177/02	Contactor	
13	209/00317/04	Clamp	
14	209/00317/01	Clamp	
15	209/00318/02	Clamp	
16	209/00412/00	Fuse	
17	209/00318/01	Clamp	
18	209/00461/00	Connecting Piece	
19	209/00318/03	Connecting Piece	

© Copyright, Alliance Laundry Systems LLC – DO NOT COPY or TRANSMIT

Steam Heating System

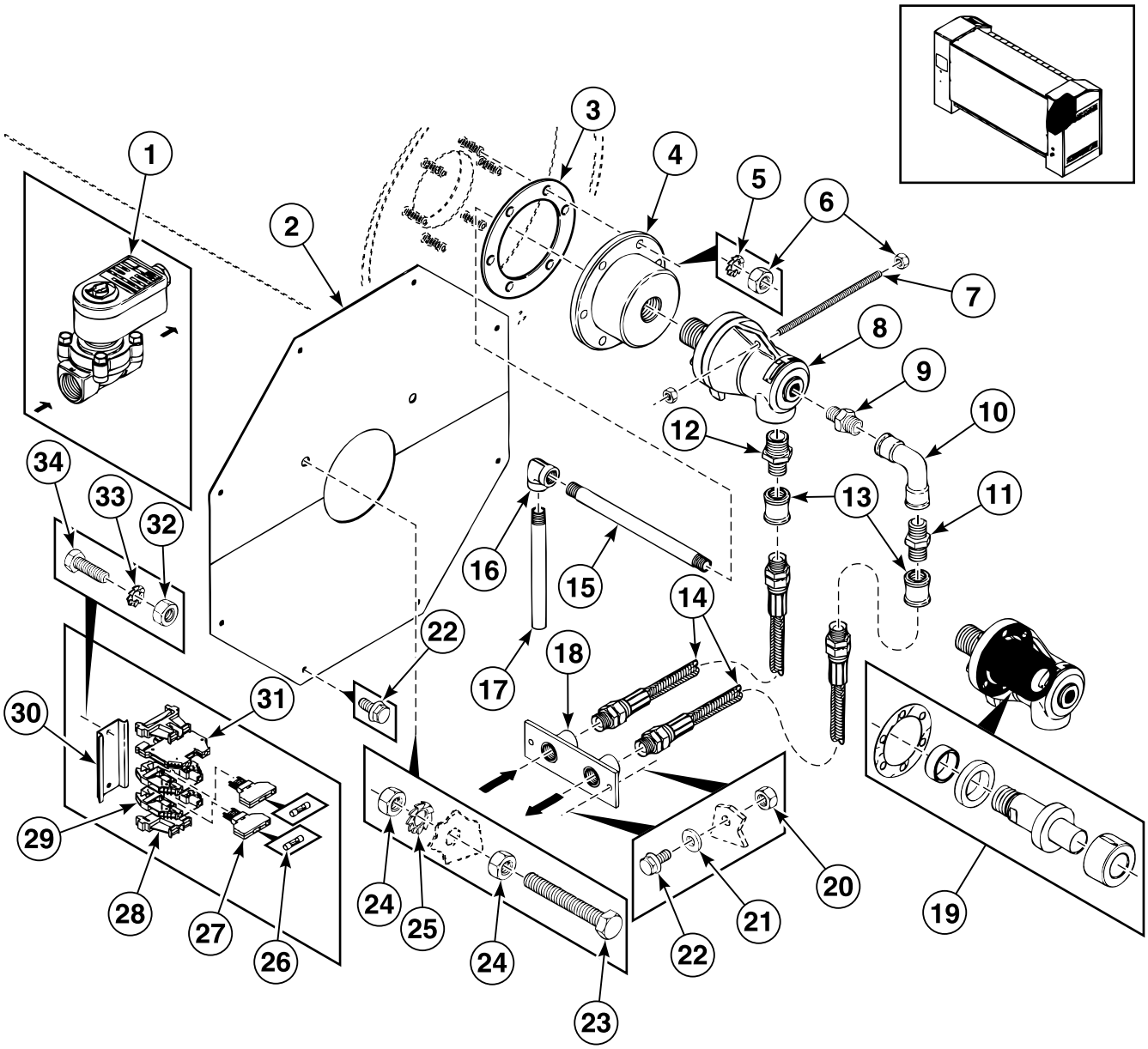

© Copyright, Alliance Laundry Systems LLC – DO NOT COPY or TRANSMIT

Steam Heating System

REF	PART NO.	DESCRIPTION	COMMENTS
1	209/00177/02	Contactor	
2	083/00236/00	Side Plate	Left
3	084/00033/00	Pulley	
4	080/00001/00	Clutch	
5	203/00002/00	Washer	
6	204/00003/00	Nut	
7	084/00014/01	Rod	
8	084/00014/00	Clutch	
9	710/00032/11	Reducing Nipple	
10	710/00056/02	Elbow	
11	710/00009/02	Reducing Nipple	
12	710/00032/02	Reducing Nipple	
13	710/00010/02	Connecting Piece	
14	217/00026/00	Steam Hose	
15	084/00019/02	Tube	
16	084/00019/01	Elbow	
17	084/00019/03	Tube	
18	081/00028/00	Connecting Piece	
19	080/00001/01	Conversion Kit	
20	204/00106/00	Nut	
21	201/00007/00	Washer	
22	206/00099/00	Bolt	
23	206/00073/00	Bolt	
24	204/00004/00	Nut	
25	203/00003/00	Washer	
26	209/00412/00	Fuse	
27	209/00318/02	Clamp	
28	209/00319/00	Clamp	
29	209/00318/01	Clamp	
30	720/00110/02	Rail	
31	209/00318/06	Clamp	
32	204/00007/00	Nut	
33	203/00006/00	Washer	
34	205/00113/00	Bolt	

© Copyright, Alliance Laundry Systems LLC – DO NOT COPY or TRANSMIT

Notes

© Copyright, Alliance Laundry Systems LLC – DO NOT COPY or TRANSMIT

Parts Index

A

Assembly Plate
111/00953/00 31

Axle
081/00024/00 27
082/00001/00 ..... 13, 15
082/01001/00 ..... 13, 15
082/03001/00 ..... 13, 15
084/00006/00 35
084/01006/10 35

B

Back Panel
083/00001/00 9
083/01001/00 9
083/03001/00 9

Ball Bearing
084/00002/00 ..... 11, 19, 21
084/00026/00 ..... 11, 19, 21
215/00010/00 33
215/00018/00 11

Belt
082/90001/00 15
082/91001/00 15
082/93001/00 15

Belt Adjuster
081/00008/00 ..... 11, 19, 21
081/00009/00 ..... 11, 19, 21

Bolt
Z07705189 45
205/00106/00 ..... 19, 21, 33, 35
205/00107/00 ..... 5, 7, 29, 41
205/00108/00 33
205/00113/00 ..... 5, 7, 33, 41, 45, 47, 49, 51
206/00005/00 35
206/00006/00 ..... 5, 7, 19, 21, 23, 25, 27, 35
206/00009/00 25
206/00010/00 35
206/00011/00 ..... 13, 19, 23
206/00013/00 37
206/00014/00 ..... 23, 41
206/00015/00 ..... 5, 7, 29, 37
206/00027/00 45
206/00033/00 ..... 31, 39
206/00042/00 27
206/00073/00 ..... 11, 19, 21, 51
206/00088/00 41
206/00099/00 ..... 5, 7, 9, 13, 15, 19, 21, 27, 37, 39, 41, 43, 51
206/00103/00 ..... 13, 15
206/00112/00 ..... 11, 19, 21
206/00114/00 33
206/00119/00 11

Bottom Plate
083/00002/00 ..... 13, 15
083/01002/00 ..... 13, 15
083/03002/00 ..... 13, 15

C

Cable
085/00012/04A 41

Cap
083/00245/00 37
083/00247/10 35
211/00139/00 9

Chain
084/00007/00 13
084/00007/20 ..... 15, 17
084/00008/00 ..... 13, 15, 17
084/00022/00 21

Chain Wheel
084/00013/00 33

Circlips
212/00033/00 11

Circular Disk
209/00329/00 29
209/00330/00 29
209/00331/00 29
209/00332/00 29

Clamp
209/00317/01 ..... 47, 49
209/00317/04 ..... 47, 49
209/00318/01 ..... 47, 49, 51
209/00318/02 ..... 45, 47, 49, 51
209/00318/06 ..... 45, 51
209/00319/00 ..... 45, 47, 49, 51

Clamping Bracket
083/00208/01 ..... 47, 49

Clip
211/10109/00 41
211/10109/01 41

Clutch
080/00001/00 51
084/00014/00 51
085/00001/00 33

Clutch Disc
085/00001/01 33

Coin Box
211/00071/00 31
211/00101/00 31

Coin Box Lock
211/00065/00 31

Coin Box Ring
111/00066/00 31

Coin Box Ring Assembly
111/00100/00 31

Coin Drop Microswitch
209/00060/12 31

Coin Meter
209/00305/00 31

Compression Spring
083/00241/00 27
083/00242/00 27
084/00015/00 25

Connecting Piece
081/00005/00 9
081/00006/00 ..... 5, 7
081/00007/00 ..... 5, 7, 9

N/A items do not appear in index.

© Copyright, Alliance Laundry Systems LLC – DO NOT COPY or TRANSMIT

081/00028/00 51
083/00206/00 37
209/00318/03 49
209/00461/00 49
710/00010/02 51

Connecting Pin
082/00007/01 ..... 13, 15
082/00008/02 15

Contact
209/00099/27 45

Contact Switch
209/00099/06 45

Contactor
209/00041/04 49
209/00148/02 ..... 47, 49
209/00177/02 ..... 47, 49, 51
209/00411/04 47

Control Pad
229/00247/00 29
229/00256/00 29

Conversion Kit
080/00001/01 51
209/00397/10 29

Cordlock
211/00117/00 35
211/00123/00 9
211/00138/00 9

Crossbar
081/00004/00 ..... 5, 7, 19, 21
081/01004/00 ..... 5, 7, 19, 21
081/03004/00 ..... 5, 7, 19, 21

Cylinder
085/00002/06 39

Cylinder Support
080/00004/00 ..... 13, 15

D

Disk
083/00244/00 29
084/00005/01 35

Door Interlock Coil
209/00017/00 33

Drain Valve Motor Assembly
209/00170/06 ..... 13, 15

Drain Valve Spring
209/00170/02 ..... 13, 15

Driving Roll
082/00005/02 ..... 13, 15
082/01005/02 ..... 13, 15
082/03005/02 ..... 13, 15

E

Elbow
084/00019/01 51
710/00056/02 51

Electrode
085/00013/00 41

Exhaust
083/00009/00 41
083/00202/00 ..... 19, 21
083/00227/00 41
083/01009/00 41
083/01202/00 ..... 19, 21
083/01227/00 41
083/03009/00 41
083/03202/00 ..... 19, 21
083/03227/00 41

Exhaust Pipe
084/00018/00 41

Exhaust Plate
081/00002/01 5

F

Fan
085/00002/05 39

Fastener
208/00018/00 37

Feed Tray
083/00263/00 7
083/03263/00 7

Feed Tray Support
083/00215/10 ..... 5, 7
083/00216/00 ..... 5, 7
083/00261/00 7
083/00262/00 7

Feeding Belt
082/00008/01 ..... 13, 15

Feeding Roll
082/00006/00 ..... 13, 15
082/00006/05 ..... 13, 15
082/01006/00 ..... 13, 15
082/01006/05 ..... 13, 15
082/03006/00 ..... 13, 15
082/03006/05 ..... 13, 15

Feeding Table
083/00212/00 23
083/01212/00 23
083/03212/00 23

Feeding Table Support
083/00212/01 23

Feeding Tray
083/00213/00 5
083/00264/00 7
083/01213/00 5
083/03213/00 5
083/03264/00 7

Finger Protection Panel
083/00210/00 23
083/01210/00 23
083/03210/00 23

Front Plate
111/00068/00 31

Fuse
209/00412/00 ..... 45, 47, 49, 51

G

Gas Burner
083/00224/00 41
083/01224/00 41
083/03224/00 41
084/00016/00 41
084/01016/00 41

N/A items do not appear in index.

© Copyright, Alliance Laundry Systems LLC – DO NOT COPY or TRANSMIT

084/03016/00 41
Gas Conversion Kit
085/00010/01 43
Gas Plate
084/00021/02 9
Gas Valve
085/00010/00 43
Gasket
083/00211/02 9
083/01211/02 9
083/03211/02 9
084/00024/00 39
Glue
271/36942/01 ..... 13, 15
Guide Plate
083/00004/00 ..... 13, 15

H

Heating Cylinder
082/00003/00 11
082/01003/00 11
082/03003/00 11
Heating Element
085/00008/00 ..... 47, 49
085/01008/00 ..... 47, 49
085/03008/00 ..... 47, 49
Hinge Pin
081/00023/01 27
Hook
083/00205/00 37
083/00208/02 ..... 47, 49
083/00229/00 41
Hook Lock Plate
083/00234/02 33
Hose Clamp
082/00009/00 ..... 13, 15
082/00010/00 ..... 13, 15, 33
223/00014/00 41

I

Ignition Box
085/00009/00 45
Ignition Electrode
085/00014/00 41
Injection Piece
084/00020/11 43
Inner Coin Box
211/00070/03 31
Interlock Coil Spring
224/00043/00 33
Inverter
227/00227/00 35
Inverter Drive
227/00228/00 35
Ironing Belt
082/00007/00 13
082/00007/20 15

L

Lathe
083/00211/01 9
083/00217/00 ..... 19, 21
083/00218/02 ..... 5, 7
083/01217/00 ..... 19, 21
083/01218/02 ..... 5, 7
083/03217/00 ..... 19, 21
083/03218/02 ..... 5, 7
Left Side Piece
081/00001/00 9
Limit Switch
209/00327/00 ..... 23, 25
Lock
720/00006/05 ..... 5, 7

M

Main Roller
082/00002/10 11
082/01002/10 11
082/03002/10 11
Microswitch
083/00219/00 23
209/00334/00 33
271/36954/00 37
Motor
085/00003/00 35
Motor Spring
226/00010/00 ..... 11, 13, 19, 21
Mounting Piece
083/00240/00 27
085/00146/190 27
Mushroom Pushbutton
209/00248/20 29

N

Nut
204/00002/00 29
204/00003/00 ..... 5, 7, 11, 19, 21, 23, 35, 51
204/00004/00 ..... 11, 19, 21, 25, 27, 51
204/00005/00 .... 5, 7, 9, 13, 19, 23, 31, 33, 37, 39, 41
204/00006/00 ..... 47, 49
204/00007/00 ..... 25, 29, 41, 47, 49, 51
204/00008/00 ..... 29, 31, 33, 37, 45
204/00009/00 ..... 13, 19, 23, 33, 41
204/00106/00 51
204/00107/00 ..... 33, 35
204/00110/00 ..... 11, 19, 21, 25
204/00113/00 ..... 11, 19, 21
204/00114/00 ..... 27, 31
204/00116/00 33
204/00302/00 37
206/00101/00 ..... 5, 7, 13, 15, 23, 31
206/00105/00 41
208/00022/00 27
211/00065/01 31
211/00132/00 ..... 23, 25

N/A items do not appear in index.

© Copyright, Alliance Laundry Systems LLC – DO NOT COPY or TRANSMIT

O

Operating Panel
081/00014/00 29

Outer Cabinet Lock
211/00070/01 31

Outer Coin Box
211/00100/00 31

P

Payment System Label
229/00275/00 29

Pedal
081/00020/00 25
081/01020/00 25
081/03020/00 25

Pedal Support
081/00010/00 25
081/00011/00 25

Pin
084/00006/01 35
084/00006/02 35
216/00008/00 33

Pipe
081/00030/00 ..... 13, 15
710/00011/06 43

Plate Assembly
083/00230/00 45

Plug
211/00124/00 9

Pressure Roll
082/00011/00 15
082/01011/00 15
082/03011/00 15

Printboard
209/00451/00 31

Pulley
084/00033/00 51

Pushbutton
209/00254/00 45
209/00254/21 45
209/00396/00 31

R

Rail
720/00110/01 ..... 47, 49
720/00110/02 51

Rectifier
085/00001/02 33

Reducing Nipple
710/00009/02 51
710/00032/02 51
710/00032/09 43
710/00032/11 51

Reducing Ring
720/00096/02 9

Return Feed Tray
083/00214/00 ..... 5, 7
083/01214/00 ..... 5, 7
083/03214/00 ..... 5, 7

Ribbon
082/00016/00 15

Right Side Panel
081/00002/00 ..... 5, 7
081/00003/00 ..... 5, 7
081/00003/10 ..... 5, 7

Right Top Panel
081/00016/00 ..... 5, 7
081/00017/00 5

Ring
080/00003/01 33
084/00032/00 33

Rivet
208/00017/00 27

Rod
084/00014/01 51

Roll
082/00004/00 ..... 13, 15
082/00004/10 ..... 13, 15
082/00004/20 ..... 13, 15
082/01004/00 ..... 13, 15
082/01004/10 ..... 13, 15
082/01004/20 ..... 13, 15
082/01004/30 13
082/03004/00 ..... 13, 15
082/03004/10 ..... 13, 15
082/03004/20 ..... 13, 15
082/03004/30 13

Roll Guide
083/00232/00 ..... 5, 7

Roll Pin
208/00013/00 31

S

Safety Thermostat
271/46026/00 27

Scraper
081/00025/02 27

Scraper Support
081/00025/20 27
081/01025/20 27
081/03025/20 27

Screen Plate
083/00220/00 23

Screw
084/00020/02 43
084/00021/01 43
205/00109/00 ..... 19, 21
206/00031/00 ..... 13, 15, 21
206/00038/00 31
206/00056/00 ..... 13, 15, 21, 35
206/00086/00 41
206/00113/00 37
206/00118/00 ..... 11, 19, 21
207/00005/00 39
207/00009/00 ..... 31, 45
207/00010/00 33
207/00014/00 33
207/00020/00 27
207/00021/00 25
207/00022/00 33
207/00031/00 31
207/00103/00 9

N/A items do not appear in index.

© Copyright, Alliance Laundry Systems LLC – DO NOT COPY or TRANSMIT

207/00108/00 ..... 31, 37
207/00112/00 23
207/00116/00 ..... 5, 7
207/00119/00 ..... 5, 7, 9, 41
207/00120/00 ..... 5, 27
207/00121/00 23
208/00007/00 31
208/00027/00 7

Separating Plate
083/00217/02 ..... 19, 21
083/00218/00 ..... 5, 7

Side Door
081/00013/01 5

Side Panel
081/00012/10 ..... 7, 9
083/00223/00 ..... 37, 41

Side Piece
083/00210/05 23
083/00210/06 23

Side Plate
083/00209/00 37
083/00221/00 41
083/00221/10 41
083/00222/00 41
083/00236/00 51
083/01221/00 41
083/01221/10 41
083/01222/00 41

Slide
083/00005/00 ..... 13, 15

Socket
710/00026/02 43
710/00026/06 ..... 11, 43

Speed Detector
209/00400/00 29

Spindle
111/00069/00 31

Spring
083/00253/00 ..... 37, 41
211/00070/04 31

Sprocket
084/00009/00 35
084/00010/00 21
084/00011/00 ..... 13, 15
084/00012/00 11
084/02011/00 21

Standoff
211/00122/00 31

Steam Hose
217/00026/00 51

Stop Plate
083/00004/01 ..... 13, 15

Support Bracket
081/00025/05 27
081/00026/00 47
081/00026/10 49
081/00027/00 35
081/01025/05 27
081/01026/10 49
081/01027/00 35
081/03025/05 27
081/03026/10 49
083/00008/00 37
083/00202/04 41
083/00226/00 41
083/00234/01 33
083/00243/00 29

Support Plate
083/00003/00 ..... 13, 15
083/00233/00 31
083/00235/00 39
084/00025/20 ..... 13, 15
084/01025/20 ..... 13, 15
084/03025/20 ..... 13, 15

T

Tape
085/00021/00 ..... 13, 15

Thermostat
085/00015/00 27

Thermostat Bracket
083/00239/00 27

Thermostat Plate
081/00022/00 27

Top Panel
081/00015/00 9
083/00211/00 9
083/01211/00 9
083/03211/00 9

Top Panel Support
083/00006/00 9
083/00007/00 9

Transformer
085/00011/00 45

Tube
084/00017/00 43
084/00019/02 51
084/00019/03 51
221/00116/00 29

V

Vacuum Chamber
083/00208/00 37

Valve
083/00204/00 37
084/00020/00 43

W

Washer
084/00006/03 35
201/00007/00 ..... 19, 21, 37, 41, 51
201/00010/00 ..... 11, 19, 21, 23, 25, 35
202/00004/00 ..... 23, 29, 31, 33, 45
202/00101/00 ..... 5, 7, 13, 19, 29, 35, 37
203/00002/00 ..... 5, 7, 11, 19, 21, 23, 27, 35, 51
203/00003/00 ..... 27, 35, 51
203/00004/00 ..... 5, 7, 9, 13, 19, 23, 29, 31, 37, 39, 41
203/00005/00 ..... 19, 21, 33, 35, 47, 49
203/00006/00 ..... 23, 25, 29, 31, 41, 45, 47, 49, 51
203/00007/00 ..... 31, 33, 37, 45
203/00010/00 41
208/00009/00 ..... 5, 7, 9, 23, 41
211/00070/02 31
223/00123/00 ..... 29, 37

N/A items do not appear in index.

© Copyright, Alliance Laundry Systems LLC – DO NOT COPY or TRANSMIT

Wheel Support
080/00002/00 11

N/A items do not appear in index.

© Copyright, Alliance Laundry Systems LLC – DO NOT COPY or TRANSMIT